ADDENDUM NUMBER 2
TO THE BID DOCUMENTS FOR
BERTH 6 EXPANSION
AT PORT ARTHUR
POPA FILE NO. 8.334

Addendum Date: **August 27, 2021**

A. This Addendum shall be considered part of the bid documents for the above-mentioned project as though it had been issued at the same time and shall be incorporated integrally therewith. Where provisions of the following supplementary data differ from those of the original bid documents, this Addendum shall govern and take precedence. BIDDERS MUST ACKNOWLEDGE THE ADDENDUM ON THEIR BID.

B. Bidders are hereby notified that they shall make any necessary adjustments in their estimates as a result of this Addendum. It will be construed that each bidder's proposal is submitted with full knowledge of all modifications and supplemental data specified herein.

Except as described below, the original and previous Addenda bid documents remains unchanged. The bid documents are modified and/or clarified, as follows:

14. <u>The following drawings and specifications are revised and included in this addendum:</u>

G-001	G-002	G-004	G-007	G-009	C-007	C-008	C-012	C-013	S-001
S-002	S-003	S-004	S-005	S-006	S-007	S-008	S-009	S-010	S-011
S-012	S-017	S-018	S-019	S-030	S-033	S-038	S-043	S-044	S-046
E-003	E-004	CP-001	CP-002	CP-003					

00 41 00.00	05 12 00	26 42 00.00	26 42 00.01	31 05 19	31 09 16.23
31 30 00.00	31 23 13.00	31 41 16	31 62 13.20	31 63 13.00	33 11 13.01
33 40 00.00	35 20 23.15				

Appendix E: Policy Directive on Diversity in Contracting
2020 – Port of Port Arthur Diversity in Contracting Annual Report
Appendix F: Insurance Requirements for Construction Contracts

<u>Submitted Questions:</u>

15. Q: Please advise if the overall project duration includes weather days. If not included, please provide the average number of weather delay days to be considered per month.
    A: The duration includes weather days. Contractor shall bid project accordingly accounting for typical weather anticipated in Port Arthur, TX, based on Standard Baseline data available from NOAA.

16. Q: Please advise if raw data for the existing condition survey can be provided.
    A: CAD files for existing condition surveys will be provided to the selected contractor.

17. Q: Please advise if it would it be possible to rail the Aggerates needed directly to the Port for off load and stockpile? Each unit train (95 Cars) would be approx. 11,000 tons & can be off loaded within 24 hours. Will Port Fees be charged for using Port facilities for delivery of Permanent Material?
    A: The Port is receptive to and encourages the use of barges and/or rail for the placement of the materials to decrease overall project costs. Any movement should be conducted in close coordination with the port regarding timing of barges and quantity of railcars. For the port, there will not be a charge to the contractor to self-perform the discharge of materials. The port is not responsible for any railcar or barge demurrage.

18. Q: Note 2 on Dwg. S-044 states Rigid Inclusions (RI) prior to installation of Anchor Wall. The RI Sub-Contractor has indicated that all pile driving in close proximity to the RI's need to be complete prior to the RI's being installed. Please advise if the order of Anchor wall install vs RI install can be up to Contractor's discretion.
    A: Order of Anchor wall installation and RI installation can be up to the Contractor's discretion.

19. Q: Item 3.6.A of Spec 31 63 13.00 seems to indicate the RI testing is by the Owner. Please confirm that all testing related to Rigid Inclusions are the responsibility of the Contractor.
    A: RI testing is to be provided by the Contractor. Specification has been revised accordingly.

20. Q: It appears the dredge slope zone to the West of Berth 5 and North of the Berth 6 bulkhead needs to be backfilled prior to the Rigid Inclusions. Please confirm that the combi-wall bulkhead has been designed to withstand the loads of setting up RI equipment (app. 250,000 lbs±) in the fill zone prior to the tie-back system installation.
    A: Verification of the bulkhead to accommodate the loads of the Rigid Inclusion equipment shall be the responsibility of the Contractor. For bidding purposes, assume the following: from Station 9+75 to the south end of the bulkhead, the bulkhead can accommodate backfilling to the required grade and an equivalent equipment surcharge of 500 PSF acting over a 30-ft by 30-ft area, located at least 10 feet from the bulkhead face. From Station 9+75 to Berth 5, the contractor shall assume shoring, or other means of supporting the bulkhead during grade raise and rigid inclusion construction, is required until the tie-back system is installed in its entirety. Assume a lateral bracing load of 15 klf, applied at Elevation 7.0', is required at the top of the bulkhead which is based on an equivalent equipment surcharge of 500 PSF acting over a 30-ft by 30-ft area, located at least 10 feet from the bulkhead face. If dewatering is performed for placement of backfill, shoring shall also be designed to accommodate all applicable resulting hydrostatic loads.

21. Q: Please advise if any of the fill zones behind the bulkhead (near Berth 5 interface etc.) needs to be demucked. If demucking is required, please provide depths of demucking.
    A: For bidding purposes, assume the 2-ft of demucking will be required in fill areas located at or below +2 MLW.

22. Q: Item 3.6.B of Spec 31 23 13.00 states that site excavated material cannot be used as backfill within the backland pavement area. Please advise if this requirement can be waived and the site excavated material can be used to backfill the backland zones.
    A: Onsite soils may be used for fills below the LTP and above the LTP. However, onsite soils shall not be used for construction of the LTP, within 10-ft of the bulkhead, or within the top 2-ft of the pavement subgrades. Only onsite soils classifying as CL, ML, SP, SW, GP, GW, SM, SC will be permitted for use as fill.

23. Q: Section A1 on Dwg. S-005 shows top of bulkhead cap elevation at +13.78'. But Section C1 (& Site grading plans) show the top of asphalt (& top of bulkhead cap) to be at +13.97'. Please confirm correct top of asphalt & bulkhead cap elevation.
    A: Top of bulkhead cap elevation is +13.97'. Drawings have been revised accordingly.

24. Q: Currently the project is to be bid as a single line lump sum price. Will the Port consider adding a bid item to capture the Rigid Inclusions (RI) as a unit price line item?
    A: Rigid inclusions shall be provided as a lump sum price. A maximum spacing is provided on the drawings; where items interfere with the typical rigid inclusion spacing, the contractor shall adjust spacing and provide additional rigid inclusions in these areas as required, while maintaining the maximum spacing requirements. It is the contractor's responsibility to identify these items, determine the total rigid inclusions required, and price the job accordingly.

25. Q: Will the port consider adding a bid item to capture the dredging as a unit price line item?
    A: Yes. See revised bid form.

26. Q: If siltation occurs due to ship and barge traffic during the course of the project, how is contractor to be compensated for removing this material within the dredge prism?
    A: Contractor shall assume 265,000 CY of dredging is required. A unit price for additional dredging, or dredge quantity deducts, has been provided accordingly.

27. Q: It was mentioned in the pre-bid meeting that the project site will be a non-TWIC area. Please confirm that the entire Berth 6 work area including the backlands (Asphalt & Soil Improvement zone) will be considered non-TWIC.
    A: The Berth 6 work area does not require TWIC card access.

28. Q: Can a drawing be provided of the various DMPA's including potential location of the dredge pipeline path, discharge location and location of the outfall structure (weir) at the DMPA's?
    A: See environmental permits (Appendix C) for DMPA locations. Dredge pipeline path is per the means and methods of the contractor, provided it is in accordance with environmental regulations and permits and other regulatory authorities having jurisdiction.

29. Q: Detail C1 on Dwg C-008 shows 8" pavement & 12" aggregate flexible base. But detail A1 on Dwg S-046 shows 12" Pavement and 8" base. Please confirm thickness.
    A: 12" Bituminous Pavement and 8" Aggregate Flexible Base is correct. Drawings C-008 has been revised accordingly.

30. Q: Please provide a drawing for the precast storm drain manholes.
    A: A typical detail is provided on sheet C-014, details C1 & A1. Exact dimensions and details of construction, including steel reinforcement, shall be provided by the contractor per Note 1 on this sheet.

31. Q: Please confirm if the precast drainage units need to be Engineered with calculations and stamped PE drawings?
    A: Precast drainage manholes shall be designed by a Professional Engineer, licensed in the State of Texas per the specifications.

32. Q: Item 3.11.I of Spec 31 23 13.00 states Density tests will be performed by Owner's Representative. But Item 3.15.B of Spec 31 23 13.00 states Contractor responsible for testing. Please clarify if all on-site material testing by Contractor.
    A: Contractor is responsible for retaining the testing agency, and the Contractors Testing Agency will perform all tests and inspections.

33. Q: Item 1.5.5 in Spec 31 62 13.20 and Item 1.4.5 in Spec 31 41 16 state that an independent geotech consultant is required to observe pile driving. Is this requirement until ALL the piles are driven or a percentage of pile driving in the beginning? If a percentage, can a value be provided?
    A: An independent Geotechnical Engineer is not required to be onsite during pile driving. The requirement has been removed from the specifications accordingly.

34. Q: The tie-back wall for the bulkhead calls out a AZ27-800 and the sheet pile for the combi-wall calls out a AZ23-800. Both these profiles are not manufactured in the United States and do not have an equivalent. Will the Port consider providing a waiver for the Buy American requirement? If a waiver cannot be provided, will the Port consider an alternate sheet pile section that would cause redesign of the location of the tie-rods and the RI's?
    A: Drawings have been revised to use NZ22 sheet piles in lieu of AZ23-800, and NZ28 sheet piles in lieu of AZ27-800. System width and tie-rod spacing has been revised accordingly.

35. Q: Items 1.C and 1.D of Spec. 31 09 16.23 seem to indicate production pile lengths are to be determined based on Dynamic PDA test results. Please confirm that the Dynamic PDA testing of the piles are for Verification purposes only. i.e. all production piles can be bought prior to performing the Dynamic PDA's.
    A: Dynamic PDA testing will be performed for verification purposes only. Production piles can be ordered before performing Dynamic testing.

36. Q: Item 3.4.1 of Spec. 31 62 13.20 states to assume test piles to be driven 15' deeper than required tip elevation. Please confirm if all test piles are to be bought 15' longer than production piles.
    A: Test piles may be ordered at the production pile lengths.

37. Q: Item 3.4.2.b in Spec 31 62 13.20 shows 72-hour restrike. But Item 3.2.E.3 of Spec 31 09 16.23 states restrike to be after 5 days. Please confirm correct restrike period.
    A: Restrike tests piles a minimum of 5 days after initial installation. Pile testing requirements for Specification Section 31 62 13.20 have been removed.

38. Q: Pile Schedule on sheet S-012 shows a typical pile cut-off elevation for the piles from Bents 1 to 12. However, details and sections from the Berth 5 transitions on sheets S-030 and S-031 show the piles for bents 1 and 2A to be at a different elevation than the rest of the bents. Please clarify pile cut-off elevations for bents 1 and 2A.
    A: Cutoff elevations have been revised on the Pile Schedule sheet to reflect the different elevations of these piles. Drawings have been revised accordingly.

39. Q: Pile Schedule on Sheet S-012 shows pile top elevation for all Row A piles to be +10.25'. Detail A1 on Dwg. S-023 also indicates the same. But the wharf section at fender panel on Dwg S-019 shows the Row A piles at fender panels to be at a lower elevation. Please confirm that the top of all Row A piles are +10.25'.
    A: Cutoff elevations have been revised on the Pile Schedule sheet to reflect the different elevations of these piles. Drawings have been revised accordingly.

40. Q: Callout 7 under Prestressed Concrete Piles notes on Dwg. No.: S-001 calls for reinforcement bars in the piles to be Epoxy Coated. Are the W4 square spiral in the piles to be epoxy coated?
    A: Reinforcing steel for piles is not epoxy coated. Note has been removed from drawings accordingly.

41. Q: ACM Specifications 35 20 25.10 (2.4 A & B) states to utilize 1/4" Polyester Cable. Drawings C-007 show the mat cables and loops around piles as SS Cables (Stainless Steel). Per the Buy American Act, Stainless Steel Cable will be extremely expensive and also difficult to locate in the U.S.A. for such a large quantity and larger cable size for 9" block mats. Please confirm that Polyester Cable are to be used for the ACM's.
    A: Cable shall be polyester. Drawings have been revised accordingly.

42. Q: Will the port consider the Grout Filled Fabric Mattress in lieu of the precast Articulating Concrete Mattresses for the shore protection?
    A: Grout fabric mattresses are not an acceptable alternative.

43. Q: Detail A1 on Dwg. S-030 shows the distance from Edge of Berth 5 to the 1st expansion joint as 16' 10-1/2". But Dwg. S-011 shows distance from Edge of Berth 5 to the C/L of the 1st expansion joint is 16'. Please confirm that the distance from edge of Berth 5 to C/L of 1st expansion joint is 16'.
    A: The distances shown are correct. Sheet S-011 is from the CL of the joint to the outer face (bottom of deck) of Berth 5. Sheet S-030 is from the top of the deck at Berth 5 and to the edge of the expansion joint.

44. Q: We would like some clarification on the dimensions of the Fender Panel Struts. Dwg. No.: S-015 seems to indicate the struts to be two independent rectangular walls behind the Waterside crane beam at the same elevation as the pile cap. However, Detail A3 on Dwg. No.: S-033 shows the space between the two struts to have concrete. Is the concrete hatch shown on Detail A3 between the struts an error? Can additional sections be provided for clarity of the fender panel struct (See marked-up sketch below)
    A: Concrete hatch was incorrectly shown and has been removed from the drawings accordingly.

45. Q: How many copies of final bid are needed for submission? Specifications page 00 00 04.00-1 just say "sealed bids" and does not specify the required number of copies.
    A: Provide 1 sealed original.

46. Q: Instructions to Bidders Note 20 Prevailing Wages requires the Contractor to pay prevailing wages set forth in the Agreement. Will certified payrolls be required for the contractor and all subcontractors?
    A: Yes.

47. Q: Please provide a copy of Specification Section 01 57 19.00 22 Temporary Environmental Controls mentioned in Environmental Control Note 2 of Contract Drawing G-004 General Notes
    A: Note 2 on Sheet G-004 should reference Division 01 General Requirements of the project specifications. Drawing has been revised accordingly.

48. Q: Will electronic delivery of Bid Proposals be accepted by the Owner?
    A: No.

49. Q: The new Berth No. 6 Combi-Wall bulkhead is designed around AZ 800mm wide sheets. These sheets are made in Luxembourg and there is no domestic 800mm wide sheet, therefore no direct equivalent. This is a Buy America project. Is the Engineer willing to open up to foreign manufacturers, or redesign using 700mm wide sheets?
    A: Drawings have been revised to use NZ22 sheet piles in lieu of AZ23-800, and NZ28 sheet piles in lieu of AZ27-800. System width and tie-rod spacing has been revised accordingly.

50. Q: Contract Drawing R-001 shows 132 Lb Crane Rail for Proposed Tracks No. 1, No. 2, and No. 3. Vendors advise the 132 Lb Crane Rail is rolled only once per year and may be difficult to procure. Would the Owner be willing to accept 136 Lb crane rail?
    A: Provide 132 Lb Crane rail.

51. Q: Please confirm if the Corner Tie-Back rods shown in the lower left-hand corner of Contract Drawing S-003 are fabricated per Detail B1 – Typical Tie-Back System Detail or Detail A4 – Secondary Anchor Wall Detail on Contract Drawing S-007 Bulkhead and Anchor Wall Tie Back Details.
    A: Corner tie rods shall be the same type as those shown in Detail B1; however, the system will go between two combi-wall pipes and T-plate connections shall be provided accordingly.

52. Q: There are three manholes, CTP, PPB and CMP shown on E-002. E-004 indicates them being different sizes. E-005 only indicates one size, 5'x5'x4' on detail 1. Are all three the same size?
    A: Three Manholes CTP, PPB & CMP are the same size, as shown on Sheet E-005.

53. Q: Do we assume the Shore Power and Communication enclosure on the wharf to be by others?
    A: Shore Power and communications enclosure shall be provided by the Contractor.

54. Q: What are the size and amount of conduits and conductors with the light poles that will be removed?
    A: Sizes of conduits and conductors that are being removed are 1" conduit and #8 conductors.

55. Q: Are the light pole conduits in a concrete duct bank?
    A: All power circuits shall be routed in a concrete duct bank.

56. Q: Google maps show a couple of buildings in line with the light poles on the waterside. Do we assume they will be removed, so we can access the conduits that are being removed?
    A: These buildings were temporary from Berth 5 construction and will be removed during demobilization of the Berth 5 Contractor.

57. Q: The Fugro Report presented for reference states it is for Berth 6, however knowing the site, it appears that that information corresponds to Berth 5, please confirm?
    A: Correct. The Fugro report was title Berth 6 as that was the previous name for what is now Berth 5. The Fugro report was provided for additional information of the site and is representative of Berth 5, not Berth 6.

58. Q: There is not a recommended soil profile in the provided geotechnical report. Can a design soil profile (strength characteristics / design parameters) be provided in order to evaluate potential alternatives to the rigid inclusions?
    A: Figures 3A to 3F of the geotechnical engineering report (GER) in Exhibit A includes soil profiles that can be used to develop a design soil profile for an alternate design. The design soil parameters can be obtained from the laboratory test results in the GER Appendix C.

59. Q: Please clarify if the design load of 115 kips for the rigid inclusions is a service load or an ultimate load.
    A: 115 kips is the design load. A factor of safety of 2.0 must be applied to the design load to obtain the ultimate load.

60. Q: Spec section 35 20 25.10 2.4.B specifies a polyester revetment cable for the articulating concrete mats. However, the details on sheet C-007 call out a stainless-steel cable in several locations. Please confirm the ACM system is supposed to use a polyester cable.
    A: Cable shall be polyester. Drawings have been revised accordingly.

61. Q: Specification Section 05 12 00 – STRUCTURAL STEEL, Page 3, Paragraph 1.4, AISC QUALITY CERTIFICATIONS, requires steel fabricators are to be an AISC Certified Fabrication Plant, Category STD. In order to increase competition and allow greater local participation, can this requirement be removed?
    A: AISC Certification is required; however, STD has been replaced with BU as a more widely certified program. Specifications have been revised accordingly.

62. Q: On Plan Sheet S-009, for the 18” and 30” storm drain bulkhead penetrations, what are the HDG sleeve I.D.s and pipe wall thicknesses?
    A: The sleeve is as determined by the manufacturer as it is part of the Link-Seal system.

63. Q: On Plan Sheet S-010, for the 54” storm drain bulkhead penetrations, what is the HDG sleeve wall thickness?
    A: The sleeve is as determined by the manufacturer as it is part of the Link-Seal system.

64. Q: For the storm bulkhead penetration sleeves shown on S-010, detail C4 and on S-009, detail A1, what are the O.D.s and thicknesses of the anti-seepage collars/rings?
    A: The sleeve is as determined by the manufacturer as it is part of the Link-Seal system.

65. Q: Sheet G-009, Note 5 says the first 328' of wharf is to be "completed and serviceable for mooring vessels prior to advancing with subsequent portions of the wharf construction", which implies the project is to be built in two phases (328'+672'); however, at the pre-bid meeting it was stated that the intention is for the contractor to start construction from the upstream side at Berth 5 and proceed downstream. Please clarify this sequencing requirement and revise Note 5 accordingly.
    A: The intent is that the Contractor work starting from Berth 5, moving south, allowing the Port use of the first 328' upon its substantial completion. This is not intended to inhibit the contractor from progressing to subsequent portions of the project prior to completing the first segment, but to prioritize sequencing from north to south so the Port may use the first 328' at the earliest practical time. The note on the sequencing has been updated accordingly.

66. Q: Sheet S-044, Note 6 provides exceptions to the 7' O.C. rigid inclusion spacing, including Foley Outfall pipes and connecting storm pipes. However, the R.I. plan on S-044 and notes do not show, nor mention the 18" and 30" HDPE storm piping shown within the tie-rod zone on sheets C-012 & C-013. Please provide a detail for these conflicted areas.
    A: The contractor may shift the actual horizontal locations of the drainage pipe, up to 3 feet, as necessary to coordinate with the Rigid inclusion and tie rods. A note has been added to the C-012 and C-013 drawings accordingly. Changes to incidental components of the drainage system shall be coordinated by the contractor accordingly.

67. Q: The tenth bullet under 1.1 A. of Section 01 11 00.00 lists "265,000 cubic yards of dredging, disposed of in placement area 8 (refer to Attachment)". Which Attachment is this referring to?
    A: The Attachment is the environmental permits. Specifications have been revised accordingly for clarity.

68. Q: Dredging cross sections on Sheets D-003, D-004 and D-005 of the contract plans call out a design dredge elevation of -45.8', indicating that the design elevation includes the base dredge elevation of -42.8' plus 1' overdredge plus 2' maintenance dredging. Paragraph 1.5 C. of Section 35 20 23.15 states, "Overdredging: To cover unavoidable inaccuracies of dredging processes, material actually removed to a maximum one foot below the depth specified and within dredging limits will be measured and paid for at full contract price." Because 1' overdredge is included in the description of the design dredge elevation, it is unclear whether the grade required for acceptance is -45.8' or -44.8'. What is the minimum required elevation that must be achieved for dredging acceptance? Also, please confirm whether dredging below -45.8' is a violation of the Department of the Army Permit No. SWG-2011-00303 provided in Appendix C.
    A: Dredge elevation 45.8' includes 1' overdredge and 2' advanced maintenance dredging. Acceptance elevation is 44.8'.

69. Q: Paragraph 1.7 of Section 35 20 23.15 indicates that a Quality Control Plan must be submitted that includes, "at a minimum: QC Personnel, QC Procedures for Material Sampling and Environmental Controls, QC Procedures for Surveying and Quantity Tracking, QC Procedures for

Material Collection, QC Procedures for Transportation and Disposal." Please clarify what material sampling and collection is required for the dredging work.

A: Dredging requirements shall be in accordance with environmental regulations, including but not limited to the Army Corps permit included in the bid documents.

70. Q: Paragraph 1.9 of Section 35 20 23.15 states that, regarding dredging and disposal, "No separate payment shall be made for Work under this specification. Payment for Work associated with this specification shall be included in the overall Lump Sum project cost." However, language in paragraph 3.8 B. of the same section indicates that material removed will be measured by the cubic yard in place based on pre- and post-dredge surveys. For consistency with standard dredging practice, will the Owner please consider modifying the Bid Form so that dredging will be unit price work?

A: Contractor shall assume 265,000 CY of dredging is required. A unit price for additional dredging, or dredge quantity deducts, has been provided accordingly.

71. Q: As is typical in dredging work, will the Owner please consider adding language regarding a variation in estimated quantity for dredging, so that if the dredging quantity varies more than 15% above or below the estimated quantity, an equitable adjustment in the contract price can be made?

A: Contractor shall assume 265,000 CY of dredging is required. A unit price for additional dredging, or dredge quantity deducts, has been provided accordingly.

72. Q: Paragraph 3.1 A. of Section 35 20 23.15 refers to a Texas Commission on Environmental Quality permit. Please provide this permit for bidder review.

A: Contractor is required to obtain necessary permits, other than the Army Corps permit provided with the project bid documents.

73. Q: Paragraph 3.2 A. of Section 35 20 23.15 states, "Turbidity control curtains shall be installed prior to commencing any dredging work. Turbidity curtains shall be used during the entire dredging operation to minimize increases in turbidity outside the area of dredging." Dredging work in this area has typically not required the use of turbidity curtains around dredge areas, and permits do not appear to require turbidity curtains. Additionally, survey boats and attendant plant require frequent access to the dredge area during dredging operations, and installation of turbidity curtains may prove to be a safety hazard for navigation to and from the work site. Would the Owner consider waiving the turbidity curtain requirement for dredging activities?

A: Turbidity curtains shall be provided if determined to be required by regulatory agencies. This includes but is not limited to the requirements of Permit No. SWG-2011-00303. Specifications have been revised accordingly.

74. Q: Paragraph 3.4 C.1. of Section 35 20 23.15 states, "Upon approval of all required submittals, the area will be made available to verify allowable working hours and days with the Owner's Representative." May dredging be conducted 24 hours per day, 7 days per week?

A: Dredging is permitted to be performed 24 hours per day, 7 days per week.

75. Q: Paragraph 3.7 B. of Section 35 20 23.15 states, "Material barges shall be watertight; overflow of barges will not be allowed…". This does not appear to be a permit requirement. Would the Owner consider removing this restriction or revising the language to allow for contractors to decant water from barges as long as decanting does not adversely affect water quality?
    A: Decanting operations shall be in accordance with environmental regulations, including but not limited to the requirements of Permit No. SWG-2011-00303. Specifications have been revised accordingly.

76. Q: Paragraph 3.8 B.1. of Section 35 20 23.15 states, "Measure the material removed and items associated with disposal including silt fences, turbidity screens, and outfall structures by cubic yard in place." Is this statement intended to direct bidders to include the costs of silt fences, turbidity screens and outfall structures in a cubic yard price for material removal?
    A: Specification section has been revised for clarity.

77. Q: Environmental Control Note 2 on Sheet G-004 of the contract plans references Specification Section 01 57 19.00 22 Temporary Environmental Controls. It doesn't appear that this spec section has been included. Please provide if necessary.
    A: Note 2 on Sheet G-004 should reference Division 01 General Requirements of the project specifications. Drawing has been revised accordingly.

78. Q: Survey Note 4 on Sheet G-004 of the contract plans indicates that bathymetric data is from a November 17, 2017 survey. Is there any more recent survey data available? Please provide xyz files of survey data.
    A: Contractor shall assume 265,000 CY of dredging is required. A unit price for additional dredging, or dredge quantity deducts, has been provided accordingly.

79. Q: Is the 10' x 10' fender panel size shown on the drawings required or can the sizing be adjusted to economize design and/or shipping? Is there a hull pressure requirement that should govern? The Panels that were provided on the adjacent berth 5 are 9' x 11' with a hull pressure of 6.0 ksf.
    A: 9'x11' panels would be an acceptable alternative; the maximum allowable hull pressure is defined on Sheet G-003.

80. Q: Can you please clarify the requirement for the UHMW facing pad thickness and overall standoff dimension and tolerance? The specification calls for a minimum wear thickness of ½" but the drawings call for 2" thick UHMW pads. ½" wear thickness can be achieved with 1-3/8" thick UHMW. We would like to ensure there is adequate panel thickness in the design. If the standoff dimension must be held as shown on the drawings and 2" thick UHMW is required this would leave a max 6-1/8" of panel thickness which is less than what is recommended for a panel this size. Berth 5 systems used 1-1/4" thick pads and the overall standoff dimension was 1/8" more (3' 11-5/8") than is shown on the Berth 6 plans providing a 7" thick panel.
    A: 1 3/8" thickness is acceptable for the UHMW facing. Standoff has been revised to match Berth 5 (3'-11 5/8"). Drawings have been revised accordingly.

81. Q: Is the port willing to consider alternate paint systems that are not Coal-tar based epoxy? We would like to propose an equivalent performance 3 coat epoxy system similar to what was used on the Berth 5 fender panels.
    A: The Port would be receptive to alternative coating systems, provided the coating systems meet the performance requirements and provide equal or better durability. Industry literature/testing on performance and durability would be required, and alternative coating systems are subject to final approval by the Port.

82. Q: Will helical piles be considered as an alternative design option to the 24" Prestressed Concrete Piles shown in sheets S-011 through S-014 of the construction drawings?
    A: No.

83. Q: Will helical anchors be considered as an alternative design to the tieback anchors shown in sheets S-006 through S-008 of the construction drawings?
    A: No.

84. Q: The Pile Schedule on Drawing S-012 indicates that all the Top of Pile Elevations are to be EL+10.25, detail sheets for the piles under the fender blocks (S-032) and the Berth 5 interface (S-030) show varying elevations. Please confirm pile top elevations.
    A: Pile tip elevations have been revised accordingly.

85. Q: Will it be acceptable to install the cast in place concrete within the Crane Rail Beams Row's A and F in lifts? Where horizontal construction joints will be utilized.
    A: See Concrete Note 13 on Sheet S-001.

86. Q: Please confirm whether the Contractor is to install Crane Rail within the rail pockets at Row's A and F. Drawing S-017 indicates the pockets are to be filled completely with lean concrete for future use whereas other detailed section views show the Crane Rail installed within the pockets.
    A: Crane rail pockets shall be filled with lean concrete; the intent is for crane rails to be installed in the future.

87. Q: Steel Piling Vendor's are stating the specified sheet piles for the Pipe-Z Combi Wall and sheet piles for the Anchor Wall are not domestically produced and available alternatives do not match the dimensions of the designed walls. Please advise.
    A: Drawings have been revised to use NZ22 sheet piles in lieu of AZ23-800, and NZ28 sheet piles in lieu of AZ27-800. System width and tie-rod spacing has been revised accordingly.

88. Q: Request a bid due date extension of 4 weeks to September 22nd 2021. This time extension is essential to develop an accurate and competitive estimate due to the current stage of correspondence.
    A: Bid date has been extended to September 8th.

89. Q: Drawing S-002 indicates a 12" bituminous pavement with 8" base, Drawing C-008 shows 8" bituminous pavement with 12" base. Please confirm.
    A: Drawing S-002 is correct. Drawing C-008 has been revised accordingly.

90. Q: Shall the contractor assume all ten (10) test piles for the 24" square wharf piles will be installed in production pile locations for bidding purposes?
    A: Yes.

91. Q: Please clarify what the unit priced item of "PREDRILLING PILES (EA)" is meant to be used for as section 31 62 13.20 3.3.4 "Predrilling of Piles" states contractor may predrill holes to reduce vibration. If the Contractor is already predrilling to reduce vibration what would the unit pricing be used for?
    A: The unit price is for predrilling as necessary if obstructions are encountered.

92. Q: Please clarify the difference between Predrilling and Pre-augering as stated in Section 31 41 16 for Steel Pile Bulkhead. Under 3.1.1 Existing Structures predrilling may be used to reduce vibrations. Under 3.1.4.3 pre-augering is not permitted. Contractor believes those methods to be the same.
    A: Pre-augering is the same as pre-drilling. Pre-drilling/Pre-augering is permitted and the specifications have been revised accordingly.

93: Q: Drawing E-003 detail #3 shows 2 j-boxes under wharf with conduits. I do not see any run direction clarifying the routes.
    A: Refer to Sheet E-002, Electrical Site Plan, Note E4. Route conduit/circuit as shown on the drawings.

94. Q: For the rigid inclusion / soil improvement, would your team consider a helical pier rigid inclusion VE solution as an alternative?
    A: No.

95. Q: Can an alternate soil improvement solution be designed and installed in lieu of Rigid Inclusions for the Backland soil improvement work?
    A: Alternate soil improvement solutions will be considered, provided that they meet the design loading criteria, bulkhead system loads, life cycle, settlement requirements, and an overall solution that meets or exceeds the performance of the rigid inclusion system. Effects on the existing diesel line shall be equal or less than the rigid inclusion system. Ultimate approval of an alternative system is at the discretion of the Port.

96. Q: Drawing states typically Rigid Inclusion spacing is 7'-0" max. In the several instances where the Rigid Inclusions will be in conflict within clear distance needed to install the proposed tie rods, can the Rigid Inclusion spacing be modified to avoid said conflicts even if it means the spacing is greater than 7'-0"?
    A: The Rigid Inclusion spacing provided, unless indicated otherwise, is a maximum spacing. The contractor shall adjust spacing and provide additional rigid inclusions as required to avoid interferences, while ensuring the maximum spacing is not exceeded.

97. Q: Note 6A states Rigid Inclusion spacing perpendicular to the buklhead between the first three rows on the southeast side of the anchor wall and first three rows behind the bulkhead wall shall be 6' O.C. Please confirm spacing for these six rows in the direction parallel to the bulkhead is the typical max. 7' O.C.
    A: The spacing parallel to the bulkhead for these side rows is a maximum of 7 feet, as shown on the plan view.

98. Q: Section 1.4 B. 1. states that the Ris shall be installed to a minimum tip elevation of EL. -70, into the Beaumont Formation. Please confirm what final tip elevation needs to be met if the Beaumont formation is deeper than or shallower than EL. -70.
    A: A minimum embedment of 10-ft into Beaumont Formation, or a minimum tip elevation of EL-70, whichever is deeper, is required.

99. Q: Please confirm Contractor will not need to provide a Rigid Inclusion design submittal that is stamped by a Texas PE since the design provided in the bid documents is by Collins Engineering, Inc.
    A: A Rigid Inclusion design submittal is not required if constructed per the bid documents.

100. Q: Section 3.6 I. describes monitoring of inclinometers and extensometers during the performance of the work. Please provide additional details on the quantity/scope of this monitoring work. What will be monitored? Where should the monitoring instrumentation be installed?
    A: A minimum of four inclinometers and four extensometers are recommended. One pair of inclinometer and extensometer shall be installed adjacent to CPT boring location CPT-108. Second pair of inclinometer and extensometer shall be installed near test boring LB-106 behind the bulkhead. The other two pairs of inclinometers and extensometers shall be installed near test borings LB-103 and LB-104. The inclinometers and extensometers shall be installed to a minimum elevation of EL -95. The inclinometers and extensometers shall be installed before any excavation or fill placement. The inclinometers shall consist of standard inclinometer casings installed and grouted within vertical boreholes. The extensometers shall consist of magnetic extensometer geotechnical instrumentation used to measure settlement or heave of soft ground under the influence of fill. A minimum of six magnetic “Spider” anchors shall be located around the guide tube at elevations of EL 4, EL -10, EL-30, EL-55, EL -70, and EL-80. Multipoint Borehole Extensometers may also be used. Magnetic Extensometers may be combined with the inclinometer system.

101. Q: In the specifications, section 31 63 13.00, 1.7 D, it states “Engage a qualified land surveyor or professional engineer to perform surveys, layouts, and measurements for rigid inclusions.” Would a Leica GPS system installed on a drill rig and calibrated to the jobsite by a licensed surveyor on a weekly basis be accepted for Rigid Inclusion installation instead of the registered surveyor?
    A: As indicated in Section 31 62 13.00 1.7 D and E, and Section 3.5, and Section 3.6, the Pre-Installation Surveys and Post-Installation Surveys shall be complete by a qualified land surveyor or professional engineer. Maintaining adequate survey control, coordinating changes with the surveyor, and locating the rigid inclusions during installation may be performed by the contractor, provided the work is approved by and under the responsible supervision of the qualified surveyor or professional engineer.

102. Q: Contract Drawing S-001 Structural Notes, Prestressed Concrete Piles – Note 7 states "Reinforcement bars shall be epoxy coated". Please confirm if this includes the #8 dowels and/or the wire spirals shown on Contract Drawing S-102 Pile Schedule and Details.
A: Reinforcing steel for piles is not epoxy coated. Note has been removed from drawings accordingly.

103: Q: The specification calls out EPDM elastomer type for the rubber fenders. Is this required or will the standard NR/SBR blend be allowed? EPDM rubber is not the standard compound used for our rubber fenders and will offer no real advantages for this application with an increased cost.
A: The Port would be receptive to alternative materials, provided the materials meet the performance requirements and provide equal or better durability. Industry literature/testing on performance and durability would be required, and alternative materials are subject to final approval by the Port.

104. Q: Are there specific tests or standards required for the ozone resistance, low temperature, water absorption, and heat resistance testing?
A: Refer to the specifications for testing requirements.

105. Q: On Sheet E-003, Electrical Box Detail 1 has three 2" conduits coming out of the Shore Power & Comm. Connection enclosures going to a Land-Side PWR/COMM pull box. There are no combination PWR/COMM pull boxes shown on E-002. Where are these located? On Sheet E-002, indicates only a 1-1/2" conduit from those enclosures to power pull boxes for heat trace. Detail 3 also indicates the three 2" conduits coming from transit shed. Where is the transit shed? Is there wires in those 2" conduits?
A: Three (3) 2" conduits indicated on plans 1-1/2" for heat trace power (disregard 2"), 2" for empty conduit terminated to PPB, and 2" empty conduit terminated to nearest CMP. Disregard the Transit Shed note.

106. Q: On Sheet E-003, Detail 3, since there is no location shown for the Pwr/Comm boxes on a site plan, the N4X SS pull box location is also missing.
A: The 316 SS Nema 4X Pull Box provided by the contractor shall be in the location as shown on Sheet 3/E-003 details in front of Power and Communications Enclosure.

107. Q: On Sheet E-003, Detail 2 refers formed concrete hole to Sheet S459. Structural drawings go to S-47.
A: Sheet S459 should read S-47.

108. Q: On sheet E-003, Detail 4, where is the exact locations of these under the wharf?
A: Sheet E-003 details inside the Power and Communications Enclosure.

109. Q: On Sheet E-002, the Type S1 light poles on the north side indicate having night light circuit DB-15, 17. Type S1 light poles detail on E-004 indicates no night lights. Please verify if circuit is needed, if not used.
A: The Light Fixture Type S1, the night light indicated as SL45 noted night light (Sheet E-004) with circuit DP-15,17 (P8-P11) indicated on Sheet E-002.

110. Q: On Sheet E-002, the Type S2 light poles do have night lights. The circuit indicated is DB-12, 14. We are going to assume it should be DB-32, 34 since 12 and 14 are being used for light poles P6, P7 and heat tracing. Since there are no conduit size given for the homerun to the panel, can this circuit be in the same conduit as the light pole circuits?
A: The Light Fixture Type S2, the night light indicated as SL30 noted night light (Sheet E-004) with circuit DP-12,14 (P1-P71) indicated on Sheet E-002.

111. Q: On Sheet E-002, there is a homerun for light poles P1, P2 and P3. That homerun is showing going into manhole CTP-1 instead of PPB-1. We will assume it goes into PPB-1, if not clarified.
A: The circuit DB-2,4 (Pole Light P1, P2,P3) shall be routed through PPB-1 not in CTP-1.

112. Q: Conduits between manholes indicate no wire. Are these empty spare conduits?
A: Any conduit indicated without conductors are empty spare conduits.

113. Q: Note E6 on E-002 state that existing light fixtures mounted in rail bridge by others. It also states that the existing feeder is to be re-routed or extended. What size of conduit and wire is there? Where does it need to be routed to?
A: Contractor shall remove existing conduit and conductors back to existing Panel LB-2. Disregard the splice, reroute or extend existing conduit and conductors as required.

114. Q: The new Berth No. 6 Combi-Wall bulkhead is designed around AZ 800mm wide sheets. These sheets are made in Luxembourg and there is no domestic 800mm wide sheet, therefore no direct equivalent. This is a Buy America project. Is the Engineer willing to open up to foreign manufacturers, or redesign using 700mm wide sheets? Any idea on when you might have response to this question?
A: Drawings have been revised to use NZ22 sheet piles in lieu of AZ23-800, and NZ28 sheet piles in lieu of AZ27-800. System width and tie-rod spacing has been revised accordingly.

115. Q: In section 31 63 13.00, 1.3, A, the specifications state "…For each additional different rig brought to the site, additional Control RIs shall be installed to assess the rig's capabilities." Can you define "each additional different rig"? If additional RIs need to be installed, what is the quantity and requirements for the additional control RIs?
A: A "different rig" is intended to mean a different type (model, size, etc.) of equipment used for installation than what was shown in the Work Plan and used for the Control RIs. See Section 31 62 13.00, 1.6. If a different type of equipment is used than was originally Shown on the Work Plan and used for the Control RIs, the Control RIs must be repeated to demonstrate suitability of the different equipment.

116. Q: Can a description of the variable buried debris requiring removal above and below water be provided? In order to accurately determine the additional days and cost for these removals we need have a better understanding of what is to be removed. Is this 1 ea. 300-ton piece of debris or 300 ea. 1-ton pieces of debris, please explain.
A: See Drawing Sheet CD-001 for a description of the potential buried shoreline debris. Potential debris is based on archive aerial imagery and the actual condition of items that may require removal is unknown. It is likely that breaking up the debris and/or cutting may be required.

117. Q: Are all ten (10) 24-inch square prestressed concrete test piles required to be installed prior to ordering production piles?
A: Dynamic PDA testing will be performed for verification purposes on production pile. Pre-production pile tests are not required.

118. Q: On drawing S-015 for the Fender Panel Strut, it appears that they extend past the crane rail beam along A, but if you look at the rebar detail on S-033, it looks like it is either a square beam extending past the crane rail beam (A1) or part of the crane rail beam (C4). Please clarify.
A: Fender panel struts extend past the crane rail beam as shown on Drawings S-015, S-032 and S-033.

119. Q: Can 24" concrete piles be driven prior to installing the bulkhead CIP concrete cap?
A: Driving piles prior to installation of the bulkhead cap is acceptable.

120. Q: Can the dredging begin prior to completing tie-rod tensioning?
A: Tie-rod tensioning must be performed prior to dredging.

121. Q: Can rigid inclusions be installed prior to driving combi-wall bulkhead piles, after driving anchor wall sheet piles, or after installing tie-back rods?
A: The rigid inclusions cannot be installed prior to installing the combi-wall bulkhead piles.

122. Q: How close to the combi-wall bulkhead can a crawler crane be staged on land to perform project work activities?
A: Equipment with a maximum equivalent uniform contact pressure of 500 psf acting over a 30-ft by 30-ft area, placed no closer than 10-ft of the bulkhead, unless the rigid inclusion ground improvements and tie-rod system are installed.

123. Q: We would like to propose precast pile caps and various sections of the crane rail beam/s with our pricing. Would this option be acceptable? Precast would offer safer working conditions and reduced schedule durations.
A: Precast solutions will be considered, provided that the system can accommodate the pile driving tolerances, meet the design loading requirements, and offer the same durability as the as-tendered system. All precast solutions will require design calculations and drawings stamped by a Professional Engineer licensed in the state of Texas. Precast solutions are subject to Port approval.

124. Q: Coating for rail plate and anchors are shown as hot-dipped galvanized. Can we assume the rail clips are also galvanized? Please confirm.
A: Provide galvanized AK62 clips.

125. Q: The rail expansion joint plates are shown as 15.5” wide on DWG R-004 (1). However, the trench width is 16” and would be too narrow for the grout bed. The standard minimum width of the trench for grout under the soleplate is the soleplate width + 2.5”. This is for ease of grout installation and visual inspection/confirmation of grout elevation on the sides. Please advise.
A: Bid as shown on the issued drawings.

126. Q: DWG R-004 (C1) shoes the length of the bend points = 7’-10”. Rail supplier/installer are stating form experience that the web of either 132 or 136RE rail is too narrow for that length and would result in razor thin edges that may fail. Longer lengths like this are reserved for crane rails such as 171CR and 175CR which have web thicknesses between 1.25-1.50” as opposed to 0.75” for the RE profiles. Rail supplier/installer would be glad to provide a drawing which shows the recommended design and end-to end length for this application as reference. Please advise
A: Bid as shown on the issued drawings.

127. Q: Rail supplier/installer recommends eliminating at least one of the three rail expansion joints shown in each of the 1,000 runs. From experience, there would be minimal expansion joints located on the 115RE track operating above ground, or in the trench using 175CR rail. In the case of Port Arthur Berth 6, the rail is entrenched, and the combination of hard-mounted clips, coefficient of friction and wheel loads helps control longitudinal movement. A spacing between joints of 700-800’ is common. Also, rail expansion joints can be problematic due to the potential for ingress of debris, causing their ineffectiveness and continual maintenance. Please advise.
A: Bid as shown on the issued drawings.

128. Q: Rail Intermittent Plates – Please clarify the 12” x 4” x ½” versus the 14” x 4” x ½” intermittent support plates. Drawing R-005 (Section A-A) shows 12” and Drawing R-004 (B2) references 14” in the area of the rail expansion joint.
A: Bid as shown on the issued drawings.

129. Q: Item 2.1.1 of Tech. Spec 31 05 19 states to provide geotextile that is woven. But the requirements of the table within the specs seem to be for non-woven. Please confirm if the geotextile needs to be woven or non-woven.
A: Notes and specifications have been revised accordingly.

130. Q: Will contractor be permitted to install submerged pipeline across the Sabine Neches Channel for dredge material disposal into DMPA? What minimum elevation can contractor install the top of pipe?
A: See environmental permits for DMPA locations. Dredge pipeline path is per the means and methods of the contractor, provided it is in accordance with environmental regulations and permits and other regulatory authorities having jurisdiction.

131. Q: Will crushed concrete be acceptable in place of the granular fill specified for the Load Transfer Platform?
A: Crushed aggregate is an acceptable substitute for granular fill, providing is meets the intended function and general gradation requirements.

132. Q: Will crushed concrete be acceptable in place of Flex Base 247 Type A that will be used underneath the Asphalt Pavement?
A: Crushed concrete is not an equivalent substitute for Flex Base 247 Type A.

133. Q: Contract Drawing E-006 Heat Trace Details, Detail 2 – Straight Piping Heat Trace Installation shows compressible or grooved rigid installation around the steel pipe. Note HT3 on the same drawing notes one inch of fiberglass insulation is required around the various piping sizes. Specification 33 11 13.01, 1.3 Water Mains provides no details regarding the piping insulation. Please provide specifications for the piping insulation.
A: The pipe insulation shall be 3" Owens Corning SSL II with ASJ MAX Fiberglass Pipe Insulation.

134. Q: The SPL2 light fixtures have been discontinued and replaced with the 3R model. Please advise.
A: Revised reference to "Model SPL2" light fixture specified to "Model SPL3R".

135. Q: Contract drawing P-003 calls 2" dia and 4" dia potable waterlines to be galvanized steel pipe. Contract drawing P-004, Item 5 - Potable water enclosure detail, Note BP1 states all pipe, fittings, and valves shall be fusion bonded epoxy powder coated. Is this a contradiction or is it only referring to piping materials in the potable water enclosure?
A: Provide Fusion Bonded Epoxy/Thermosetting coating for exposed galvanized/non-galvanized pipe, fittings and valves in Potable water/Backflow Preventer enclosure.

136. Q: Contract Drawing C-012, Drainage Plan- 1 identifies five endwall structures R03, R04, R13, R15, and R-19. Please provide standard details of these structures and the stone protection adjacent to each structure.
A: Details have been provided in revised specifications.

137. Q: Contract Drawing C-001 Site & Surfacing Plan - 1 references a Detail C3/S-046 which details a Precast Type 2 Jersey Barrier along the top edge of the South Retaining Wall. Contract Drawing C-008 Site Grading Typical Section Detail C2 does not show any Precast Type 2 Jersey Barrier at this location. Please confirm the locations of the Precast Type Jersey Barrier to be provided by the Contractor.
A: Jersey barriers shall be provided by the Port, as necessary. Drawing S-046 has been revised accordingly.

138. Q: Contract Drawing S-045 Berth 5 to Berth 6 Backland Transition, Detail A1 has a note that jersey barriers at the top of the Retaining Wall are to be provided and installed by the Port. Please confirm the locations of the Precast Type Jersey Barrier to be provided by the Port.
A: Jersey barriers shall be provided by the Port, as necessary. Drawing S-046 has been revised accordingly.

139. Q: The contractor would like to request of full set of AutoCAD files for the project drawings.
A: AutoCAD files may be requested by the winning bidder.

140. Q: Expansion Joint Plates - These continuous plates are shown as 15.5" wide on Dwg. R-004 (1); however, the trench width is 16" and would be too narrow to pour grout. The minimum width of the trench for a grout pour is the width of the soleplate + 2.5" to pump/head box and visually inspect on the opposite side.
A: Bid as shown on the issued drawings.

141. Q: Rail Expansion Joints -
a. Dwg. R-004 (C1) shows the length to bend points = 7'-10". From past experience, we can confirm that the web of either 132 or 136RE rail is too narrow for that length and would result in razor thin edges that may fail. Longer lengths like this are reserved for crane rails such as 171CR and 175CR which have web thicknesses between 1.25-1.50" as opposed to 0.75" for the considered profiles. We would be glad to provide a drawing which shows the recommended design and end-to-end length for this application.
b. We recommends eliminating at least one of the three rail expansion joints shown in each of the 1,000-foot runs. The rail on this project is encased, and the combination of hard-mounted clips, coefficient of friction between the rail and plates and vertical wheel loads helps control longitudinal movement. A spacing between rail expansion joints of between 700-800' is common for a differential of 80 degrees F. A rail expansion joint is often problematic due to rail wear and ingress of dirt and debris, causing continual maintenance toi ensure its cleanliness and effectiveness.
A: Bid as shown on the issued drawings.

142. Q: Please advise the pipeline routing into DMPA 8, 9A, 9B & 11 for disposal.
A: Pipeline routing shall be determined by the contractor and shall be in accordance with regulatory agency requirements, including the Army Corps permit issued for the project.

143. Q: Is the contractor responsible for debris disposal or will the Port dispose of the debris once it is unloaded and stockpiled on land?
A: All debris disposal is the responsibility of the Contractor. See Specification Section 02 41 00.00 for additional information.

144. Q: Please confirm liquidated damages are to be assessed for late substantial completion, or explain what is intended.
A: Correct.

145. Q: On sheet 77 (S-032), detail C4, there is a dashed line showing the bottom of the crane rail beam. Is a construction joint required at this location?
A: The dashed line is intended to show the bottom of the crane rail beam beyond the fender panel block. See Concrete Note 13 on Sheet S-001 for work pertaining to mass concrete and the inclusion of construction joints.

146. Q: Specification Section 26.42.00 Part 2.1 states that each of the land anode wells is designed to provide a minimum current output of 30A for a 20-year design life, Kindly furnish a similar design criteria for the marine anode system.
A: Each water side anode is designed to provide a minimum current output of 9A for a 25-year design life.

147. Q: It is noted that in Electrical Details (Drawing E-003 Detail 5) cables are set in concrete duct banks. However, in the Cathodic Protection details (Drawings CP-003, and CP-003) all CP cables are shown to be within direct buried 2" Schedule 80 PVC conduit. Please confirm that cathodic protection conduit is not required to be within concrete duct bank as per electrical specifications.
A: Cathodic protection system wiring shall be buried in 2" Schedule 80 PVC conduit.

148. Q: The Cathodic Protection layout (Drawing CP-001) does not indicate the location or proposed routing for negative bond cables to the structure. Specification Section 26.42.00 Part 3.12 states that each rectifier will require two negative structure connections. As multiple rectifiers are located in common locations the proposed bonding locations will greatly affect the total bond cable requirements. Kindly provide required bond locations, proposed cable routing for negative bonds, and cable size for every branch of cable to bond locations.
A: Refer to sheet CP-002, Detail B1 for structure connection locations. Refer to Specifications Section 26.42.00 Part 3.12 for cable size.

149. Q: Electrical pull boxes have been shown on Drawing E-004 for other services but there is no indication of any pull boxes for cathodic protection cabling. Kindly confirm that pull boxes will be required at light poles for cathodic protection cabling and if so how these boxes will physically relate to the other services at the same locations as it appears congested.
A: Cathodic protection cables shall be carried via buried 2" Schedule 80 PVC conduit. Refer to sheet CP-002.

150. Q: Drawing CP-002 Section B1 shows a 2” conduit with two 90-degree bends terminating at the below grade bulkhead bond location. It is suggested that the pulling of a #1/0 HMWPE cable that is welded to the structure thru this arrangement may prove impractical. Kindly confirm if the installation of pull boxes at the negative bond locations is acceptable.
A: Installation of pull boxes as necessary for the contractor to pull the required wire through the required conduit is acceptable.

151. Q: Electrical drawings (ref. E-002) show proposed conduit routing to allow for material take off. Kindly provide similar proposed routing details for CP systems.
A: Refer to sheet CP-001 for waterside and soil-side cathodic protection system locations.

152. Q: As per the project specification Section 26.42.00 Part 2.6 all above ground conduit is to be galvanized rigid steel. Drawing CP-002 Section B4 shows that the conduit from the waterside rectifier to the suspended anode is to be within a 2” Schedule 80 PC conduit under the wharf (above ground). Kindly clarify intent.
A: Cathodic protection system conduit shall be in accordance with CP Drawings. Refer to CP-001 to CP-003.

153. Q: Drawing CP-002 Section B4 shows the anode wires to be within 2” Schedule 80 PVC conduit. Drawing CP-003 Detail A2 show the anode header cable as exposed and directly bolted to the concrete via ½” SS conduit straps. Kindly clarify the design intent for cable mounting under the concrete structure.
A: 2" Schedule 80 PVC conduit shall be used at locations where anode header wire is to be buried underground and routed to rectifier locations. CP-003, Detail A2 refers to the #1/0 HMWPE anode header wires which runs transversely along the wharf which connects anodes within the same group together. Refer to Sheet CP-001 for waterside anode grouping.

154. Q: Drawing CP-003 Detail A2 show the anode header cable as bolted to the concrete via ½” SS conduit straps. As the anode header cable transverses the entire wharf (1,000LF) on 25 foot anode spacing kindly indicate the required spacing of the straps.
A: Conduit straps shall be used at sufficient length so that no cable slack is present along the entire length of cable.

155. Q: As per the project specification Section 26.42.00 Parts 3.5, 3.16, and 3.17 a structure-to-soil potential survey of the installed bulkhead wall is to be completed at 50’ spacing along the bulkhead prior to installation of the CP system, during energization, and during final system testing. As per the civil structural design (Drawing S-044) the bulkhead is cut off several feet below finished grade can capped with a concrete bulkhead cap. Part 3.5.2 states that structure to soil measurements are to be made with the reference electrode in direct contact with the concrete slab. No provision has been made for permanent test cables between the bulkhead and grade.
a. It is unclear how structure-to-soil potential measurements are intended to be made with a reference electrode in contact with concrete rather than with soil. Kindly clarify how these readings are intended to be taken.
b. As an industry standard solution it is proposed that permanent test bonds be installed using #10 THHN cable welded directly to the structure as per CP-003 Detail C4. These test leads should be terminated within an embedded flush mount, open bottom CP Test Station at the desired test locations. The test stations should be of sufficient diameter and depth to allow insertion of a portable reference cell to contact the underlying soils. This will allow for accurate structure-to-soil potential measurements to be taken throughout the CP system lifecycle. Numerous options exist for this such as CP Test & Valve Products, Inc. product #668 or equivalent.
A: Refer to revised Specifications Section 26.42.00 Parts 3.5, 3.16, and 3.17.
b. Refer to revised Specifications Section 26.42.00 Parts 3.5, 3.16, and 3.17. Refer to revised and clouded CP drawings sheet CP-001 and CP-002.

156. Q: As per the CP specifications the services require a third party NACE certified CP Specialist. This will incur a significant additional cost to the Owner. May we propose that the services for the CPS be provided by our in-house Professional Engineer with documented marine CP system experience?
A: A third-party NACE-certified CP Specialist must be utilized.

157. Q: Reference is made to CP-002 Section B4. To allow for quantity take off kindly confirm the proposed depth of anode relative to bottom of wharf structure.
A: Due to variations in the bottom of soil depth, all waterside anodes shall be centered between the mudline and mean low water line.

158. Q: Reference is made to civil drawing S-044 Section A1 which shows three layers of geogrid set above the concrete piles. It is advised that the drilling of anode wells thru this subgrade system will cause significant damage to the geogrid system. It is recommended that a 20' length of 12" diameter schedule 30 steel pipe casing be set prior to the soil improvements at the anode well locations to facilitate drilling without damaging the improvements. This would be in lieu of the 10' section of PVC casing currently specified.
A: Well screens shall be utilized where applicable. Refer to Drawing CP-003, Detail B1.

159. Q: Based on the design rating for the proposed water based rectifiers it would appear that the marine anodes currently specified as platinum could be replaced with Mixed Metal Oxide (MMO) for a significant cost savings to the Owner. Based on published technical data, a 10 anode array of MMO anodes can easily provide an equivalent rated output and lifespan as the proposed platinum anodes in brackish water. Based on current commodity prices for precious metals it is recommended to consider the use of an alternate as platinum anodes are over 2x the wholesale cost of MMO anodes.
A: The contractor shall use specified anodes illustrated in Drawing CP-001 to CP-003.

160. Q: Kindly confirm if there will be an onsite location for the disposal of drilling cuttings and fluids.
A: All debris and waste shall be removed and disposed of offsite by the Contractor. Disposal shall in accordance with regulatory requirements.

161. Q: The Rigid Inclusions (RI's) specification 31 63 13.00 states that RI's must be installed by displacement method. Please advise if the method (displacement vs non-displacement) can be based on Contractor's means and methods.
A: Both displacement and non-displacement methods are acceptable methods of Rigid Inclusion installation.

162. Q: Detail A1 on Sheet S-008 calls out a #7 x 2'-0" speed dowel in the expansion joints of the bulkhead cap. Please clarify if the 2'-0" length pertains to the total length of the dowel or if this 2' length pertains to the length of the speed dowel sleeve.
A: 24" is the length of the dowel. Dowels shall be epoxy coated as indicated.

163. Q: Details A4 and B4 from sheet S-046 calls out a #7 x 24" epoxy coated speed dowel in the construction and expansion joints from the retaining walls. Please clarify if this 24" length pertains to the entire length of the dowel or if it pertains to the length of the speed dowel sleeve. Additionally, please confirm if the dowel needs to be epoxy coated.
A: 24" is the length of the dowel. Dowels shall be epoxy coated as indicated.

164. Q: The Corps permit appears to show a route that is south of the bridge with a culvert crossing the road into DMPA 8. One of the Dredging sub-contractors would like to propose an alternate pipe route east of the project to DMPA 8 (see screen shot below and attached KMZ file). Please advise if this pipeline route to DMPA 8 will be acceptable.
A: Pipeline routing shall be determined by the contractor and shall be in accordance with regulatory agency requirements, including the Army Corps permit issued for the project.

165. Q: Article 14 – Tests and Inspections, section 14.02 B states: "Owner shall retain and pay for the services of an independent inspector, testing laboratory, or other qualified individual or entity to perform all inspections and tests expressly required by the Contract Documents to be furnished and paid for by Owner, except that costs incurred in connection with tests or inspections of covered Work will be governed by the provisions of Paragraph 14.05". However, Section 01 45 00 Testing Laboratory Services, 1.5 A states: "At a minimum, the Contractor shall employ an independent testing laboratory to perform testing for work specified…". For avoidance of doubt, what testing services will be furnished by the Owner?
A: All independent inspections and testing required, unless specifically stated to be provided by the Owner, shall be provided by the Contractor.

166. Q: There appear to be inaccuracies in the working points on G-007. The distances between WP1 & WP2, and WP3 & WP4 are both 67'-0". Based on the structural drawings, the WP1 to WP2 distance should be 66'-2" and the WP3 to WP4 distance should be 64'-6". Based on their relation to the other control points, it appears WP1 and WP4 have incorrect coordinates given; please confirm the correct working point coordinates.
A: Working points have been verified and drawing G-007 revised accordingly. Note the description of where the working points are taken.

167. Q: Sheets G-007 and S-044 call out the backland limits as 200'x1000'. However, the SP working points show a larger backland footprint area. Please confirm the backland limits should be shown as ±205'x1000'.
A: Working points have been verified and drawing G-007 revised accordingly. Note the description of where the working points are taken.

168. Q: Due to the size and complexity of this project as well as the large number of outstanding RFIs, we respectfully request a 2-week extension to the bid due date.
A: Bid date has been extended to September 8th.

169. Q: Specification sections for both steel bulkhead piles and concrete wharf piles require building condition surveys (before and after pile driving) as well as vibration monitoring of "adjacent structures." Please specify the structures that require condition survey and/or vibration monitoring as well as the number and approximate location of monitoring points.
A: Condition surveys and vibration monitoring shall be performed on existing structures within 100 feet of pile driving operations. Per the specifications, the contractor shall engage a professional engineer to perform the condition surveys and determine requirements for vibration monitoring.

170. Q: Specification section for steel bulkhead piles requires vibration monitoring during the test pile program, but there is no test pile program for the steel bulkhead piles and the wharf test pile program will not begin until well after the bulkhead is complete. Similar language is included with the concrete piling spec. Please clarify both the scope and duration of vibration monitoring required during pile driving.
A: Condition surveys and vibration monitoring shall be performed on existing structures within 100 feet of pile driving operations. Per the specifications, the contractor shall engage a professional engineer to perform the condition surveys and determine requirements for vibration monitoring. For vibration monitoring during installation of the bulkhead piles, see Specification Section 31 09 16.23.

171. Q: Planned layout for Rigid Inclusions is a 7' (max) grid, typical. This pattern will interfere with tie rods for bulkhead on a fixed 8'-11" spacing. To avoid conflict and maintain the maximum 7' spacing, additional RIs will be required. Please confirm that for bidding purposes we are to assume the typical 7'x7' grid for rigid inclusion in the tie rod areas. Or, provide a modified layout to address the conflicted area and total qty of rigid inclusions to be assumed as a common basis for bids.
A: The Rigid Inclusion spacing provided, unless indicated otherwise, is a maximum spacing. The contractor shall adjust spacing and provide additional rigid inclusions as required to avoid interferences, while ensuring the maximum spacing is not exceeded.

172. Q: The phasing plans show the Rigid Inclusions to be installed after the bulkhead wall but prior to the tie rod installation. The cutoff of the RIs is +/- 6.5' which is 3.5' higher than the tie rod elevation. This sequence makes installation of tie rods less efficient and risks damage to the RIs. Will the Engineer allow installation of tie rods prior to install of RIs? Tie rods could be tensioned before or after the RIs are installed.
A: Tie rods may be installed prior to installation o the RIs; however, the contractor is responsible for protecting the tie rods and ensuring the tie rods are not damaged during subsequent construction operations. Tie rod tensioning shall only occur after RIs are installed.

173. Q: At the northeast end of Berth 6 (approx. 150 LF), the bulkhead wall overlaps with the existing dredged slope from the Berth 5 project. The existing slope elevation at the face of the new bulkhead wall is much deeper at this location. However, the typical construction sequence requires tie rods to be installed and tensioned prior to dredging in front of the wall. Please confirm the structural stability of the bulkhead wall for this interim condition and/or clarify the required construction sequence for this location.

A: Verification of the bulkhead to accommodate the loads of the Rigid Inclusion equipment shall be the responsibility of the Contractor. For bidding purposes, assume the following: from Station 9+75 to the south end of the bulkhead, the bulkhead can accommodate backfilling to the required grade and an equivalent equipment surcharge of 500 PSF acting over a 30-ft by 30-ft area, located at least 10 feet from the bulkhead face. From Station 9+75 to Berth 5, the contractor shall assume shoring, or other means of supporting the bulkhead during grade raise and rigid inclusion construction, is required until the tie-back system is installed in its entirety. Assume a lateral bracing load of 15 klf, applied at Elevation 7.0', is required at the top of the bulkhead which is based on an equivalent equipment surcharge of 500 PSF acting over a 30-ft by 30-ft area, located at least 10 feet from the bulkhead face. If dewatering is performed for placement of backfill, shoring shall also be designed to accommodate all applicable resulting hydrostatic loads.

174. Q: For the area behind the combi-wall near Berth 5 that is in deep water, please confirm this location is not considered a cofferdam and therefore require dewatering to place and compact fill, until an elevation of 1’ above the water is reached?

A: Area behind the combi-wall shall be backfilled with "Fill" or "Normal weight Fill", and in accordance with the project specifications. Backfill shall be placed in dewatered conditions as necessary to obtain required compaction. Alternatively, a well-graded granular material may be placed hydraulically in underwater conditions. Material shall be suitable for underwater placement and consist of sand (SP, SW), gravel (GP, GW), or crushed rock materials with less than 10-percent by weight passing the No. 200 Sieve, and containing no Clay. Selection of the fill material must be coordinated with the Rigid Inclusion contractor and approved by the RI contractor and the Owner's Representative. The fills placed below the water levels must be vibro-compacted. The vibro-compaction densification program should achieve a minimum relative density of 65-percent of the entire fill mass, or a minimum SPT N-value of 15 blows per foot within the fill mass. Contractor shall submit material and placement plan for underwater placement for approval.

175. Q: Specifications for Rigid Inclusions mention geotech instrumentation and monitoring (e.g. inclinometers & extensometers). Please provide specific requirements for the monitoring program (e.g. number & location of monitoring points, duration, who is responsible for monitoring and reporting, etc.) so the appropriate scope can be accurately priced.
A: A minimum of four inclinometers and four extensometers are recommended. One pair of inclinometer and extensometer shall be installed adjacent to CPT boring location CPT-108. Second pair of inclinometer and extensometer shall be installed near test boring LB-106 behind the bulkhead. The other two pairs of inclinometers and extensometers shall be installed near test borings LB-103 and LB-104. The inclinometers and extensometers shall be installed to a minimum elevation of EL -95. The inclinometers and extensometers shall be installed before any excavation or fill placement. The inclinometers shall consist of standard inclinometer casings installed and grouted within vertical boreholes. The extensometers shall consist of magnetic extensometer geotechnical instrumentation used to measure settlement or heave of soft ground under the influence of fill. A minimum of six magnetic "Spider" anchors shall be located around the guide tube at elevations of EL 4, EL -10, EL-30, EL-55, EL -70, and EL-80. Multipoint Borehole Extensometers may also be used. Magnetic Extensometers may be combined with the inclinometer system.

176. Q: Specifications for PCPS wharf piles require a test pile program to determine final order lengths of production piles, however, the geotech report by Schnabel Eng indicates this is not necessary due to the recent pile driving data available from Berth 5 construction. The specified test pile program will add significant time and costs to the Berth 6 project. In light of the recent data available from Berth 5, please consider removing the test pile requirements from this contract.
A: Test piles will be required; however, test piles can be ordered at the production pile lengths.

177. Q: Spec Section 31 09 16.33 - Driven pile Load Test and spec section 31 62 13.20 – Precast/Prestressed Concrete Piles have numerous conflicting requirements regarding the test pile program. Which spec section are we to follow?
A: Where the Specification Section 31 09 16.33 Driven Pile Load Tests and Specification Section 31 62 13.20 conflict, with relation to pile testing requirements, the requirements in Specification Section 31 09 16.33 shall govern.

178. Q: Spec Section 31 62 13.20 – Precast/Prestressed Concrete Piles, para. 3.4.1. The referenced paragraph indicated to drive test piles in the vicinity of specific borings and CPT locations. Most of these locations are upland away from the wharf area. Are the test piles to be driven at upland locations? Please clarify.
A: Test piles are to be driven within the wharf footprint, at locations closest to the reference borings. Specification Section 31 62 13.20 para. 3.4.1 has been revised to reference Specification Section 31 09 16.33.

179. Q: Spec Section 31 09 16.23, Part 1 General, para. D. The referenced paragraph indicates that the contractor shall estimate the production pile order length taking into account the variability of the subsurface conditions between the test pile locations. The contractor is not the designer of record and will not determine final pile lengths. Please confirm that the Owner and Engineer will review and interpret data from the test pile program and will be responsible to provide minimum pile tip elevations or order lengths. In addition, specify how long we should allow for the Engineer to review the data and finalize pile lengths.
A: Test piles are for verification of pile load capacity - test piles shall be ordered based on the production pile lengths.

180. Q: Drawing S-038 – Water Vault. The vault size shown on the structural plan does not match what is shown on the Water sheets. In addition the Water drawing is showing a precast vault embedded in the pier and the callout for the Neenah grate is smaller than the vault opening. Please clarify what is required.
A: Water vault shall be 3'-6" high; the structural drawings have been revised accordingly.

181. Q: Drawing E-003 – Electrical Box Detail 3. The referenced detail is showing an electrical box to be installed between the bulkhead and the pile cap. There doesn't appear to be room to fit this in the space shown on the structural drawings. Please clarify.
A: Contractor shall provide blockout in bulkhead cap as necessary to accommodate electrical box enclosures. For bidding purposes, assume a 3'Lx2'Hx1'D blockout shall be provided at each electrical box location.

182. Q: Drawing S-005, Detail A1. The referenced detail is showing the depth of the bulkhead step at the precast to be 2' – 11 5/8". The precast and the deck topping slab is 2'-8 5/8" thick. Is the 1" thick UHMW the correct thickness? Shouldn't the UHMW contact the bottom of the precast?
A: The 2'-11 5/8" was incorrect and has been revised to 2'-9 5/8".

183. Q: Drawing S-005, Detail A1. How is the elastomeric pad to be fused to the steel plate? Please specify the required method.
A: Elastomeric pads shall be vulcanized to the steel plate, similar to the standard for fabricating bridge elastomeric pads.

184. Q: Elastomeric pads shall be vulcanized to the steel plate, similar to the standard for fabricating bridge elastomeric pads.
A: Drawings show a single storm line draining from the wharf drain system upland (from structure # R30 to R26).

185. Q: Plan Sheet S-002, detail A1, shows the 54" Foley Outfall pipes penetrating the primary anchor wall, with the sheets not cutoff below the pipe. Plan Sheet S-007, detail C4, calls out a continuous primary anchor wall at the (2) 54" outfall pipe and on the detail's plan view drawing there is a gap in the sheet piles, possibly indicating a cutoff below the pipe. Do the primary anchor wall sheet piles get cutoff below the 54" outfall pipes and if so what is the EL of the cutoff? If not, then please provide a detail for the primary anchor wall penetration.
A: Anchor wall sheets are discontinued at Foley Outfall. See Sheet S-007.

186. Q: The specification sections for both the steel and concrete pile state: a "Registered Professional Geotechnical Engineer… shall be hired by the contractor to observe job pile installation…" Please confirm a Registered Professional Geotechnical Engineer needs to be physically onsite daily to observe all of the pile driving.
A: The requirements has been removed from the specifications.

187. Q: On Sheet S-006, detail A2, Bulkhead Cap Return Wall Elevation, do theses pipe piles get concrete fill and if so, what is the elevation of the bottom of the plug?
A: Concrete plugs shall be provided in all combi-wall pipe piles, from Elevation 0.0' to the bulkhead cap.

188. Q: For installation of the retaining wall at work point SP-4 near the Texas Pellets parking area and existing rail track, the limits of construction shown on C-004 will allow open cutting the excavation with top slopes remaining within the limits. Please confirm that temporary shoring will not be required at this location, provided the excavation area remains within the limits of construction.
A: Maintaining slope stability and the stability of adjacent structures and loaded areas, which includes existing rails and parking areas, shall be the responsibility of the contractor. Shoring shall be required by the contractor as necessary to maintain stability.

189. Q: Is there a trench minimum width (beyond the HDPE sleeve O.D.) for the tie-rod trenches?
A: Trench width for tie-rods shall be provided as necessary to complete the work. Means and methods of trenching are the responsibility of the contractor.

190. Q: Do the tie-rod trenches require a specific backfill material? If so please provide a detail.
A: Tierod trenches below the LTP shall be backfilled with Select Fill, in accordance with Specification Section 31 20 00.00, part 2.1.8. Onsite soils classifying as classifying as CL, ML, SP, SW, GP, GW, SM, SC will be permitted for use as tierod trench backfill, but shall not be placed within 10-ft of the bulkhead, within the top 2-ft of the pavement subgrades, or within the LTP.

191. Q: Specification Section 40 05 71.14 , Check Valves, 3.1c, says install valves at locations indicated on drawings or as alternatively located by Owner's Representative. Where are the check valves located on the drawings?
A: The Check Valves required are as shown on Sheet P-004 Detail #5, Potable Water Enclosure Detail.

192. Q: In order to properly calculate the volume of bypass pumping required for work at the twin 54" Foley Outfall, please provide the design storm flow rate.
A: The 10-year design storm flow rate is 143.29 cfs.

193. Q: For the work on the work on the existing dual 54" Foley Outfall, will the contractor be required to excavate to the nearest joint for temporary removal to facilitate combi-wall installation or will cuts repaired with couplers be allowed?
A: Contractor may remove to the nearest joint, or cuts and couplers may be provided as necessary to install the new combi-wall and extend the outfall pipes through the bulkhead. Couplers shall be an approved system to maintain continuity, performance, and integrity of the existing outfall pipes.

194. Q: For the Combi-Wall pipes that are below the dual 54" Foley Outfall Pipe, do they get filled with a concrete plug? If so, please provide the bottom of concrete plug elevation.
A: No concrete plug is required for these pipes. Contractor is responsible for plugging/sealing the pipes by other means to prevent loss of concrete during placement of the concrete penetration enclosure.

195. Q: For the Load Transfer Platform's "Granular Fill" shown on Sheet S-044, please confirm that crushed stone OR sand can be utilized per the requirements of section 31 23 13.00, 2.1.2 Granular Fill, as the two materials vary significantly performance and in cost
A: Only crushed stone shall be used as Granular Fill for construction of the Load Transfer Platform; the Granular Fill material shall meet the requirements of Section 31 23 13.00, 2.1.2. The specification section has been revised accordingly.

196. Q: The legend on Sheets C-001 & C-002 indicates 8" Proposed Bituminous Pavement; however, the referenced detail on S-046/A1 shows a 4" superpave surface course plus an 8" TY-C base course, with a combined thickness of 12". Please clarify the AC paving depth.
A: 12" pavement thickness is correct. Drawings C-001 and C-002 have been updated accordingly.

197. Q: Rigid Inclusion Section 31 63 13.00, 3.5.B1 Surveying states: "Prior to installation of the RIs, each RI location shall be surveyed by a licensed surveyor." Is the intention to have a licensed surveyor physically survey/verify each RI location or after initial layout, can the RI location data be surveyed/collected by a surveyor working under the supervision of a licensed surveyor and then verified/approved by the licensed surveyor?
A: A surveyor working under the supervision of a licensed surveyor can perform the surveys.

198. Q: Demolition and Removal Notes state "The contractor shall have sole responsibility of removing all existing shoreline structures and abandoned inland structures that may impact the work…". Please confirm that the contractor's lump sum base bid price shall only include the costs for removing visible debris, and debris quantified on the plans. Therefore any debris buried, but not quantified on the plans, will be measured and paid under one of the two variable debris removal unit price items.
A: Refer to Specification Section 01 11 00.00 and the contract drawings for the quantity of shoreline debris removal included in the base bid.

199. Q: Specification Section 01 11 00.00 Summary of Work indicates "Removal of 330 tons of shoreline debris and remnant structures, as shown on the contract drawings". Is there an itemized quantity survey that can be provided that characterizes this debris? There are substantial cost differences for debris, depending of the waste stream requirements.
A: See Drawing Sheet CD-001 for a description of the potential buried shoreline debris. Potential debris is based on archive aerial imagery and the actual condition of items that may require removal is unknown. It is likely that breaking up the debris and/or cutting may be required.

200. Q: Paragraph 3.1 A. of Section 35 20 23.15 refers to the U.S. Army Corps of Engineers Dredging and Disposal Permit. Is this in reference to the Permit No. SWG-2011-00303 provided with the specifications, or is there a separate permit specific to the dredging and disposal associated with this work? If there is a different permit, please provide for bidder review.
A: There is not a separate permit issued for dredging and disposal; however, the contractor is responsible for ensuring dredging and disposal is in accordance with all local, state, ad federal regulatory requirements. This includes but is not limited to the requirements of Permit No. SWG-2001-00303.

201. Q: Paragraph 3.4 B.1. of Section 35 20 23.15 states, "Make all arrangements including right-of-way and permits for locating and installing dredge pipelines and casings. Submit location of dredge pipelines and casings for review." Are there any restrictions regarding access to placement areas or restrictions as to where dredge pipelines can come ashore in the areas? If so, please provide additional detail.
A: Dredging and disposal work shall be in accordance with Permit No. SWG-2001-00303, and all applicable local, state, and federal regulatory requirements.

202. Q: Paragraph 3.4 D.2. of Section 35 20 23.15 states, "Propose through the submittal process a disposal method employing an approved disposal site." With bidders pricing disposal of dredge material at four different placement sites, does the Owner anticipate that multiple disposal sites will be available for the Contractor to choose from, or will the Owner direct the Contractor to one disposal site? What will dictate which placement site will be used for the dredging work?
A: The placement site will be determined by the Army Corps of Engineers.

203. Q: Paragraph 3.4 E.1. of Section 35 20 23.15 states, "The Contractor shall comply with the placement plan limits and volumes as indicated in the permit." Are there specific placement locations or cells within each disposal area that the contractor will be directed to use, or will the contractor choose where to place material within a disposal area?
A: Dredging and disposal work shall be in accordance with Permit No. SWG-2001-00303, and all applicable local, state, and federal regulatory requirements. Actual placement site will be determined by the Army Corps.

204. Q: Do any of the dredge material placement sites require modifications or improvements (to weir boxes, dikes, etc.) by the contractor in order to perform this work?
A: Dredging and disposal work shall be in accordance with Permit No. SWG-2001-00303, and all applicable local, state, and federal regulatory requirements. Actual placement site will be determined by the Army Corps.

205. Q: Re: train rail - Plates and anchor bolts are shown as hot-dip galvanized. Can we assume that the rail clips are also galvanized?
A: Provide galvanized AK62 clips.

206. Q: Re: train rail - a. Dwg. R-004 (C1) shows the length to bend points = 7'-10". From past experience, Rail Supplier can confirm that the web of either 132 or 136RE rail is too narrow for that length and would result in razor thin edges that may fail. Longer lengths like this are reserved for crane rails such as 171CR and 175CR which have web thicknesses between 1.25-1.50"as opposed to 0.75" for the RE profiles. Rail Supplier can provide a drawing which shows the recommended design and end-to end length for this application.
A: Bid as shown on the issued drawings.

207. Q: Re: train rail - Rail Supplier recommends eliminating at least one of the three rail expansion joints shown in each of the 1,000 runs. Using Jacksonville as an example, there are minimal expansion joints located on the 115RE track operating above ground, or in the trench using 175CR rail. In the case of Port Arthur, the rail is entrenched, and the combination of hard-mounted clips, coefficient of friction and wheel loads helps control longitudinal movement. A spacing between joints of 700-800' is common. Also, rail expansion joints can be problematic due to the potential for ingress of debris, causing their ineffectiveness and continual maintenance.
A: Bid as shown on the issued drawings.

208. Q: Spec Section 03 30 00, para. 1.4e. Mass Concrete. Most of the concrete is shown to be 3-feet or more in thickness. Will the addition of ice and cold water to the concrete mixes be allowed to reduce the effects of mass concrete temperature rise or are other methods anticipated to be required?
A: Where placements meet the definition of Mass Concrete per 03 30 00 para 1.4, provide measures in accordance with ACI 207.1R-05 and ACI 211.1.

209. Q: Spec 03 30 00, part 2.6.5 states that corrosion inhibitor is required for Class "S" concrete at a rate of 4.5 gallons per cubic yard. This dosage seems unusually high and will require significant added cost for the ready-mix. In addition, this dosage will have adverse impacts on both setting time and workability/slump of the mix. Will the Engineer consider reducing or eliminating this requirement for mixes that otherwise meet specifications?
A: For bidding purposes contractor shall assume a dosage rate of 4.5 gal/cu. yd. Mix design shall be developed by the contractor. Lower dosage rates of corrosion inhibitor may be considered for approval, provided that the all other requirements of the specifications are met and the mix design is demonstrated to provide a minimum 75-year design life for the location, exposure, and intended use of this structure. Mix design approval, especially those that differ from the specifications, is ultimately to the sole discretion of the Port.

210. Q: The bulkhead pile cap and outboard crane rail beam are deep CIP sections and would typically be placed in multiple lifts. Will longitudinal/ horizontal construction joints be allowed for these or other members?
A: See Concrete Note 13 on Sheet S-001 for work pertaining to mass concrete and the inclusion of construction joints.

211. Q: Due to the phasing requiring both dredging and wharf pile driving to precede the installation of the ACM Slope Protection, can siltation be expected to occur between the dredging and ACM installation timeframe? If so, please provide an estimated infill rate.
A: Dredging quantity shall be based on 265,000 CY. If additional quantities in dredging is required, a Unit Cost item for dredging has been included on the revised bid form.

212. Q: Regarding Articulated Concrete Mats Section 35 20 25.10, paragraphs 3.1C and 3.3, please confirm the cost of underwater subgrade inspection prior to filter fabric and after ACM placement is the owner's responsibility.
A: Contractor shall provide quality control to ensure the filter fabric placement and ACM placement is in accordance with the plans and specifications and meets the design intent. Quality assurance inspections may be performed by the Port.

213. Q: As an alternative to ACM Slope Protection, would a grout bag based slope protection system be considered?
A: Grout bags are not an acceptable alternative.

214. Q: On S-008 Detail C4 "King-Pile Tie Rod Connection Detail", What size is the field weld showed for the Cast T-Plate?
A: Weld shall be 5/16" fillet.

215. Q: S-008, Note 2 says "Provide weld along sheet pile flange…." What size is this weld?
A: Weld shall be 3/16"x4" fillet weld.

216. Q: Buy America or America(n)? - There is a paragraph that relates to both Buy America and Buy American. Both require steel material to be supplied from the U.S.; however, Buy American has been interpreted in the past to allow fabrication in North America. Please clarify.
A: Procurement requirements for this project is as follows:
Buy American Act – 41 USC Section 8301-8305 (Appendix D, Page C-2, General Federal Legislation Para. rr)
Executive Order 13788 – Buy American and Hire American (Appendix D, Page C-2, Executive Order Para. H)

217. Q: Please confirm that Appendix F – Contractor Insurance Requirements will be included as the Exhibit 1, 'Contractor Insurance Requirements' document referenced in Article 5. INSURANCE AND INDEMNIFICATION of the 'Standard Form of Agreement' or confirm the Exhibit 1 document is still to be provided. If the Exhibit 1 document is still to be provided, please notify bidders when it will be available for review.
A: Appendix F is Exhibit 1, and is included in this Addendum 2 for reference.

218. Q: The Insurance Exhibit requires both Commercial General Liability and also an Owner's & Contractors Protective Liability. Given the General Liability policy provides coverage to Port of Port Arthur as an additional insured, is the OCP policy required and if so, please confirm the limits the OCP policy will be required to have.
A: Reference Appendix F for the insurance requirements. The OCP is required and is the same coverage requirement for CGL, or $1 million as written.

219. Q; Will be the contractor be responsible for the maintenance of the "Joint Road (Owned by Railroad Company)" during the performance of the work? If yes, what are the requirements.
A: Contractor shall provide a water truck to water the Joint Access Road three (3) times per day for the duration of the project. During wet periods, watering can be decreased. Watering shall be performed 6 days per week if working Saturdays. The contractor will not be responsible to purchase the water.

220. Q; What is the estimated start and duration of the Berth 5 Backlands Contract?
A: Construction on the Berth 5 Backlands is estimated to start in the 4th quarter of 2021 and be complete within the second quarter of 2022. For bidding purposes, contractors shall not assume this area will be available for laydown or staging purposes for the Berth 6 Expansion Project.

221. Q: Instructions to Bidders section 21. Sales and Use Taxes mentions exemptions, including "…tangible personal property which is to be incorporated into and/or consumed in the performance of this project.", but does not specifically state rental construction equipment. Is rental construction equipment, such as cranes and excavators, included in the exemption?
A: The Port of Port Arthur Navigation District is an organization which qualifies for exemptions pursuant to the Texas Tax Code, Chapter 151, Limited Sales, Excise and Use Tax Act. No Texas sales tax shall be included on the prices bid for tangible personal property which is to be incorporated into and/or consumed in the performance of this Project. The contractor performing this Project may purchase materials, supplies, and/or equipment incorporated into and/or consumed in the performance of this Project by providing to its suppliers an exemption certificate issued in accordance with Texas law. For specific questions or interpretations of the Texas Tax Code, bidders should consult their legal counsel or CPA.

222. Q: Instructions to Bidders section 21. Sales and Use Taxes mentions exemptions, including "…tangible personal property which is to be incorporated into and/or consumed in the performance of this project." Typically construction materials that are consumed by or not incorporated in the permanent work are not exempt from sales or use taxes. Please clarify/confirm the sales tax exemption for construction materials that are either consumed by or not incorporated in the final work.
A: The Port of Port Arthur Navigation District is an organization which qualifies for exemptions pursuant to the Texas Tax Code, Chapter 151, Limited Sales, Excise and Use Tax Act. No Texas sales tax shall be included on the prices bid for tangible personal property which is to be incorporated into and/or consumed in the performance of this Project. The contractor performing this Project may purchase materials, supplies, and/or equipment incorporated into and/or consumed in the performance of this Project by providing to its suppliers an exemption certificate issued in accordance with Texas law. For specific questions or interpretations of the Texas Tax Code, bidders should consult their legal counsel or CPA.

223. Q: Is the Berth 6 contractor responsible for maintenance of the KCS access road? If so, please provide requirements such as grading, watering, etc.?
A: Contractor shall provide a water truck to water the Joint Access Road three (3) times per day for the duration of the project. During wet periods, watering can be decreased. Watering shall be performed 6 days per week if working Saturdays. The contractor will not be responsible to purchase the water.

224. Q: The Contract Documents state this project includes federal funding administered by the USDOT Maritime Administration (MARAD) through a FY 2018 BUILD grant program and is subject to the requirements of the Buy America Act – 41 U.S.C. §§8301 et seq. Please provide information regarding the domestic product preferences for this project, including any specific requirements for iron and steel materials/products.
A: Procurement requirements for this project is as follows:
Buy American Act – 41 USC Section 8301-8305 (Appendix D, Page C-2, General Federal Legislation Para. rr)
Executive Order 13788 – Buy American and Hire American (Appendix D, Page C-2, Executive Order Para. H)
For specific questions or interpretations of the above requirements, bidders should consult their legal counsel or CPA.

225. Q: Due to the inaccuracies of dredging, the dredging specifications allow a maximum one foot below the depth specified; however, ACM specifications state no blocks shall project vertically more than 1 inch beyond the adjacent blocks. Please revise the ACM tolerance to at least match the allowable dredge depth variation.
A: ACM shall be installed per manufacturer's specification and recommendations as to ensure manufacturer's intent regarding performance and warranty is preserved.

226. Q: There are no liquidated damages set forth in the Agreement, please provide the liquidated damages per calendar day. Will damages be assessed until substantial completion or final completion?
A: Liquidated Damages for reasons as described in the bid documents shall be $5,600.00 per day and will be assessed until substantial completion.

227. Q: Is there a maximum amount of calendar days the contractor is allowed to submit?
A: The maximum contract time for Completion of Project shall be 855 Calendar days.

228. Q: Please clarify where acknowledgement of receipt of all Addenda shall be placed on the Bid Form.
A: Please see revised Bid Form (attached).

229. Q: Please clarify the documents required to be submitted as part of the bid proposal, specifically regarding the Construction Specifications. Are all of the approximately 207 pages of the Construction Specifications to be submitted or just the bid forms within this document? Please explain what the intent is.
A: No the full 207 pages is not required to be submitted. Please see revised Bid Form (attached).

230. Q: Please explain what work by other contractors we need allow for.
A: The Port is operational 24 hours a day and has various operations underway simultaneously. Although there is no other work scheduled in the Berth 6 area at this time, the Contractor must be cognizant that access for other contractors or personnel to the site area may be required.

231. Q: Is there a schedule for port cargo operations available? How will the cease of operations and abandon or temporarily vacate as necessary to facilitate port cargo operations be handled? These operations will impact cost and delay contract schedule, will time and cost (direct and indirect) be reimbursable?
A: The Port is operational 24 hours a day and has various operations underway simultaneously. Although there is no other work scheduled in the Berth 6 area at this time, the Contractor must be cognizant that access for other contractors or personnel to the site area may be required.

232. Q: Instructions to Bidders, section 10 states the contractor will be required to list on the Bid Form all proposed subcontractors, but Bid Form Section 4.0 "Attachments" does not include this. Is a subcontractor listing required from all bidders? If so, to allow the most competitive pricing, can the list of proposed subcontractors be provided 48 hours after the bid deadline?
A: No. A subcontractor list is NOT required to be submitted with the bid package.

233. Q: Bid Form, Section 4.0 "Attachments" lists the full Construction Specifications as a document to be submitted with bids. Please confirm this is not required and update Bid Form accordingly.
A: No this is not required. Please see revised Bid Form (attached).

234. Q: Current bid time is 9 AM on 9/8 which is Wednesday morning after the Labor Day holiday on Monday 9/6. To allow for the holiday and provide additional time for sub and supplier quotes to be evaluated, can the bid time be moved to the afternoon that day, suggest 2 PM?
A: No. Bid time remains 9AM local time.

235. Q: What, if any, are the SBE, MBE, and WBE Participation % goals?
A: There are no mandatory or required percentage goals for diversity in contracting measures. However, it is the goal of the Port of Port Arthur to increase the participation of local, minority, veteran, and women owned businesses utilized in Port contracts. As such, the Port has adopted the Policy Directive on Diversity in Contracting, dated June 24, 2020, and included as part of Appendix E to the project specifications. The Diversity in Contracting initiative will be evaluated by an Annual Report, a sample of which has been included in this Addendum, and shall become a part of Appendix E.

236. Q: How much are liquidated damages for each calendar day after substantial completion date until substantial completion is obtained?
A: Liquidated Damages for reasons as described in the bid documents shall be $5,600.00 per day and will be assessed until substantial completion.

237. Q: How much are liquidated damages for each calendar day after the final completion date?
A: Liquidated Damages for reasons as described in the bid documents shall be $5,600.00 per day and will be assessed until substantial completion.

238. Q: Will the Owner make Material-On-Hand (MOH) payments for permanent materials fabricated for the project, but not yet installed into the permanent work?
A: Yes. Refer to Article 15, Section 15.01.B.2 of the Standard General Conditions.

239. Q: The Contract is silent as to Access to the Work. Please confirm that the Owner shall provide uninterrupted access to the Work or explain what is intended and identify any known limitations.
A: Refer to Plan Sheet G-008. Contractor access is available 24/7 along the Joint Access road (list as "Existing Access Road"). The Port has a joint access agreement with the KCS (owner of the roadway). Speed limit is currently 12 mph. Contractors, vendors and employees must adhere to the speed limit. Access can be withdrawn by the KCS for failure to comply. The rail yard operates 24/7. The speed limit required for safety. If the existing access route if blocked (very rare) access can be obtained from the opposite end of the Access Road coming in from Terminal Road on the west side.

240. Q: The Contract Documents appear unclear on dealing with excusable weather delays for adverse weather in excess of anticipated. Please provide the monthly table of expected adverse weather days or confirm that the use of either U.S. Army Corps of Engineers or another government tabulation of expected adverse weather by month for the Project area is acceptable, and, confirm that such adverse weather days in excess of those expected, if any, shall be handled by the parties as an compensable delay, or explain what is intended.
A: Refer to Article 4, Section 4.05.C of the Standard General Conditions regarding adverse weather. Contractor shall incorporate normal weather delays in their bid for Port Arthur, TX, based on Standard Baseline data available from NOAA.

241. Q: The Contract Documents are silent on corona virus 2019 (COVID-19) impact costs. Please clarify if Owner will negotiate those impacts in the form of a change order for time and cost impacts or provide guidance on how Offeror should price those impacts and include them in it offer.
A: Refer to Article 4, Section 4.05.C of the Standard General Conditions.

242. Q: The Contract Documents lack clarity on the handling of excess adverse weather. Please confirm that the Parties will use a standard calendar of anticipated adverse weather of expected days by month of expected adverse weather and that Contractor shall track, document and present adverse weather in excess of anticipated on a weekly basis for an adjustment of the Contract Time, with such adjustment presented on a monthly basis, or explain what is intended.
A: Refer to Article 4, Section 4.05.C of the Standard General Conditions regarding adverse weather. Contractor shall incorporate normal weather delays in their bid for Port Arthur, TX, based on Standard Baseline data available from NOAA.

243. Q: The Contract Documents are unclear on existing Hazardous Materials. Please identify any presently existing HAZMAT within the project limits and include the location, the specific material(s) and concentrations determined, when such HAZMAT is expected to be remediated by the Owner or explain what is intended.
A: There are no known hazardous materials located on the project site. An environmental analysis of the site was prepared and no evidence of Recognized Environmental Conditions (RECs) likely to affect the proposed project were observed.

244. Q: The Contract Documents appear unclear on permits. Please confirm that any and all Project/building permits shall be the sole responsibility of the Client/Owner or explain what is intended.
A: A building permit from the City of Port Arthur is not required for this project. Permits for Stormwater, cathodic protection deep wells and any other project related items will be the responsibility of the Contractor.

245. Q: The Contract Documents appear unclear on the relocation of any utility conflicts, if encountered. Please identify necessary each incomplete utility relocation, if any, within the project limits with a date for completion and a contact for coordination; and, please confirm that the Parties shall negotiate an equitable adjustment for any cost or time impacts resulting from undisclosed utilities, if encountered, or explain what is intended.
A: Known utilities are shown on contract drawings. It is the Contractor's responsibility to locate all utilities prior to commencing work. Any additional utilities not shown will be addressed in accordance with Article 11 of the Standard General Conditions.

246. Q: Per the construction specifications Section 00 02 00.00-3, item 10 Subcontractors, Suppliers and Others state that the Contractor will be required to list on the Bid Form all proposed subcontractors. Please clarify where we are to list the subcontractors on the Bid Form. Also please clarify if it is only subcontractors to be listed or are material suppliers required to be listed?
A: A subcontractor list is NOT required to be submitted with the bid package. The Port however reserves the right to request list of subcontractors and vendors at a future time.

247. Q: The amount of liquidated damages is not identified in the Contract Documents. Please confirm the amount of liquidated damage to be assessed by Owner in the event of late completion.
A: Liquidated Damages for reasons as described in the bid documents shall be $5,600.00 per day and will be assessed until substantial completion.

248. Q: Where is the nearest waterline available to service the office area?
A: Reference Sheet P-002. Nearest waterline is located at the end western return wall on Berth 5.

<u>BIDDER MUST ACKNOLWEDGE THIS ADDENDUM ON THEIR BID FORM.</u>

END OF ADDENDUM 2

8/27/2021

00 41 00.00 - 1

BID FORM: Port of Port Arthur Berth 6 Expansion

To: Port of Port Arthur Navigation District of Jefferson County, Texas
221 Houston Avenue
Port Arthur, Texas 77640

From: _____
(Name of firm submitting bid)

Project: _____ Project

1.0 DECLARATION

Having carefully examined the place of the Work, the Drawings and Project Manual prepared by Collins Engineers, Inc., we agree to accomplish the work in accordance with the Contract Documents, and will enter into a Contract (Agreement), if awarded on the basis of this bid, within _____ days after the receipt of bids.

Bidder acknowledges receipt of the following ADDENDA:

Addendum No.	**Signature Acknowledging Receipt**
_____	_____
_____	_____
_____	_____
_____	_____

2.0 PROPOSAL

A. We, the undersigned, offer to perform the work for the following amounts:

TOTAL BID PRICE OF ALL BASE BID WORK:
_____

_____DOLLARS. $_____

ALTERNATE ITEM A: ADDITIONAL PRICE IF DREDGE DISPOSAL IN PLACEMENT AREA 11 IS REQUIRED INSTEAD OF PLACEMENT 8:
_____DOLLARS. $_____

ALTERNATE ITEM B: ADDITIONAL PRICE IF DREDGE DISPOSAL IN PLACEMENT AREA 9A IS REQUIRED INSTEAD OF PLACEMENT 8:
_____DOLLARS. $_____

ALTERNATE ITEM C: ADDITIONAL PRICE IF DREDGE DISPOSAL IN PLACEMENT AREA 9B IS REQUIRED INSTEAD OF PLACEMENT 8:

_____DOLLARS. $_____

B. We agree to substantially complete the work within _____ calendar days after the date the contract time commences to run.

3.0 VARIABLES

A. We, the undersigned, offer to perform the following unit work items, if required outside of the base bid quantities, for the following amounts:

UNIT ITEM 1: COST PER TON OF BURIED DEBRIS REQUIRING REMOVAL, ABOVE WATER:

_____DOLLARS/TON. $_____

UNIT ITEM 2: COST PER TON OF BURIED DEBRIS REQUIRING REMOVAL, BELOW WATER:

_____DOLLARS/TON. $_____

UNIT ITEM 3: COST FOR PRE-DRILLING 24-INCH PRESTRESSED PILES:

_____DOLLARS/EA. $_____

UNIT ITEM 4: COST FOR DIFFERENCE IN DREDGE QUANTITY:
(Base Bid Assumes 265,000 cubic yards. This price is for additive or deduct amount.)

_____DOLLARS/YD^3 $_____

B. We agree to substantially complete the work with no more than the following calendar days added to the base contract duration, based on the unit items required outside the base bid quantities.

UNIT ITEM 1: ADDITIONAL DAYS REQUIRED PER TON OF BURIED DEBRIS REQUIRING REMOVAL, ABOVE WATER:

_____DAYS/TON. _____

UNIT ITEM 2: ADDITIONAL DAYS REQUIRED PER TON OF BURIED DEBRIS REQUIRING REMOVAL, BELOW WATER:

_____DAYS/TON. _____

UNIT ITEM 3: ADDITIONAL DAYS FOR PRE-DRILLING 24-INCH PRESTRESSED PILES:

_____DAYS/EA. _____

00 41 00.00 - 3

4.0 ATTACHMENTS

The following documents are attached as an integral part of this bid proposal:

A. Bid Security
B. Port of Port Arthur Berth 6 Expansion Construction Specifications
C. Sealed Envelope containing Contractor's Itemized Breakdown of the Lump Sum bid elements
D. Sealed financial statement (00 82 00)
E. Certification regarding lobbying (00 83 00-1)
F. Good Faith Effort Certification (00 84 00-1)

5.0 SIGNATURES

Bidder: _____
(Print or type the full name of your proprietorship, partnership, corporation or joint venture.*)

By:
_____
(Signature of duly authorized officer of the company)

Name:
_____
(Print or type name and company title)

Address: _____
(Print or type business address of Bidder)

Telephone:
_____
(Print or type telephone number)

*If the Bidder is a joint venture, add additional identification and signatures/or each member of the joint venture, in the space below.

END OF DOCUMENT

00 41 00.00

SECTION 05 12 00

STRUCTURAL STEEL
05/14

PART 1 GENERAL

Subject to the General and Supplementary Conditions, this section includes the supply of all labor, equipment, materials, and incidentals for all structural steel.

1.1 REFERENCES

The publications listed below form a part of this specification to the extent referenced. The publications are referred to within the text by the basic designation only.

AMERICAN INSTITUTE OF STEEL CONSTRUCTION (AISC)

AISC 325	(2017) Steel Construction Manual
AISC 326	(2009) Detailing for Steel Construction

AMERICAN WELDING SOCIETY (AWS)

AWS A2.4	(2012) Standard Symbols for Welding, Brazing and Nondestructive Examination
AWS D1.1/D1.1M	(2015; Errata 1 2015; Errata 2 2016) Structural Welding Code - Steel

ASME INTERNATIONAL (ASME)

ASME B46.1	(2009) Surface Texture, Surface Roughness, Waviness and Lay

ASTM INTERNATIONAL (ASTM)

ASTM A123/A123M	(2017) Standard Specification for Zinc (Hot-Dip Galvanized) Coatings on Iron and Steel Products
ASTM A153/A153M	(2016) Standard Specification for Zinc Coating (Hot-Dip) on Iron and Steel Hardware
ASTM A307	(2014; E 2017) Standard Specification for Carbon Steel Bolts, Studs, and Threaded Rod 60 000 PSI Tensile Strength
ASTM A36/A36M	(2014) Standard Specification for Carbon Structural Steel
ASTM A449	(2014) Standard Specification for Hex Cap Screws, Bolts, and Studs, Steel, Heat Treated, 120/105/90 ksi Minimum Tensile Strength, General Use

ASTM A53/A53M	(2012) Standard Specification for Pipe, Steel, Black and Hot-Dipped, Zinc-Coated, Welded and Seamless
ASTM A563	(2015) Standard Specification for Carbon and Alloy Steel Nuts
ASTM A572/A572M	(2018) Standard Specification for High-Strength Low-Alloy Columbium-Vanadium Structural Steel
ASTM A6/A6M	(2014) Standard Specification for General Requirements for Rolled Structural Steel Bars, Plates, Shapes, and Sheet Piling
ASTM A615/A615M	(2016) Standard Specification for Deformed and Plain Carbon-Steel Bars for Concrete Reinforcement
ASTM A775/A775M	(2017) Standard Specification for Epoxy-Coated Steel Reinforcing Bars
ASTM A780/A780M	(2009; R 2015) Standard Practice for Repair of Damaged and Uncoated Areas of Hot-Dip Galvanized Coatings
ASTM F1554	(2018) Standard Specification for Anchor Bolts, Steel, 36, 55, and 105-ksi Yield Strength
ASTM F2329	(2013) Zinc Coating, Hot-Dip, Requirements for Application to Carbon and Alloy Steel Bolts, Screws, Washers, Nuts, and Special Threaded Fasteners
ASTM F436	(2011) Hardened Steel Washers

1.2 SUBMITTALS

Contractor shall provide submittals in conformance with the requirements of the General and Supplementary Conditions, and in accordance with Section 01 33 00 SUBMITTAL PROCEDURES. Submit the following:

SD-01 Preconstruction Submittals

AISC Fabrication Plant Quality Certification

SD-02 Shop Drawings

Fabrication drawings including description of connections

SD-03 Product Data

Galvanizing

Welding electrodes and rods

Non-Shrink Grout

SD-06 Test Reports

Bolts, nuts, and washers

SD-07 Certificates

Steel

Bolts, nuts, and washers

Galvanizing

Welding procedures and qualifications

Welding electrodes and rods

1.3 RELATED SECTIONS

Drawings and general provisions of the Contract, including General and Supplementary Conditions and other Division 01 Specification Sections, apply to this Section. Other technical specification sections that may relate to this section, include but are not limited to the following:

A. Section 03 62 16.00 - NON-SHRINK GROUT
B. Section 09 97 13.00 20 - STEEL COATINGS
C. Section 31 41 16 - STEEL PILE BULKHEAD
D. Section 06 13 33 - PIER TIMBERWORK
E. Section 34 11 01.00 - RAIL TRACKWORK
F. Section 35 59 13.16.20 - MARINE FENDERS
G. Section 31 68 13 - TIE RODS

1.4 AISC QUALITY CERTIFICATION

~~Work must be fabricated in an AISC Certified Fabrication Plant, Category Std. Submit AISC fabrication plant quality certification.~~Work must be fabricated in an AISC Certified Fabrication Plant, Category BU or SBR. Submit AISC fabrication plant quality certification.

1.5 QUALITY ASSURANCE

1.5.1 Fabrication Drawing Requirements

Submit fabrication drawings for approval prior to fabrication. Prepare in accordance with AISC 326 and AISC 325 and AISC 317. Fabrication drawings must not be reproductions of contract drawings. Include complete information for the fabrication and erection of the structure's components, including the location, type, and size of bolts, welds, member sizes and lengths, connection details, blocks, copes, and cuts. Use AWS A2.4 standard welding symbols. Any deviations from the details shown on the contract drawings must be clearly highlighted on the fabrication drawings. Explain the reasons for any deviations from the contract drawings.

1.5.2 Certifications

1.5.2.1 Welding Procedures and Qualifications

Prior to welding, submit certification for each welder stating the type of welding and positions qualified for, the code and procedure qualified under, date qualified, and the firm and individual certifying the

qualification tests. If the qualification date of the welding operator is more than one-year old, the welding operator's qualification certificate must be accompanied by a current certificate by the welder attesting to the fact that he has been engaged in welding since the date of certification, with no break in welding service greater than 6 months.

Conform to all requirements specified in AWS D1.1/D1.1M.

1.6 MEASUREMENT AND PAYMENT

No separate payment shall be made for Work under this specification. Payment for Work associated with this specification shall be included in the overall Lump Sum project cost.

PART 2 PRODUCTS

2.1 SYSTEM DESCRIPTION

Provide the structural steel system, including coatings and galvanizing, complete and ready for use. Structural steel systems including design, materials, installation, workmanship, fabrication, assembly, erection, inspection, quality control, and testing must be provided in accordance with AISC 325 except as modified in this contract.

2.2 STEEL

2.2.1 Structural Steel

Rolled shapes shall be ASTM A572/A572M. Angles and Plates shall be ASTM A36/A36M. Rolled shapes and fender system structural steel shall be coated with coal-tar epoxy in accordance with Specification Section 09 97 13.00. All other steel shall be hot-dip galvanized in accordance with these specifications, unless noted otherwise.

2.2.2 Steel Pipe (Except for Pipe Piles)

ASTM A53/A53M, Type E or S, Grade B, weight class STD (Standard). For pipe piles refer to Specification Section 31 41 16.

2.3 BOLTS, NUTS, AND WASHERS

Submit the certified manufacturer's mill reports which clearly show the applicable ASTM mechanical and chemical requirements together with the actual test results for the supplied fasteners.

2.3.1 High-Strength Bolts

2.3.1.1 Bolts

Bolts for steel-to-steel connections shall be ASTM A325 or ASTM A449, Type 1. Bolts for timber shall be ASTM A307.

2.3.1.2 Nuts

Nuts for A325 and A449 bolts threaded rod shall be ASTM A563, Grade DH, Hex style. Nuts for A 307 bolts and threaded rod shall beASTM A563, Grade A, Hex style.

2.3.1.3 Washers

Washers for A 449 bolts and threaded rod shall shall be ASTM F436. Washers for A307 bolts and threaded rod shall shall be ASTM F844. All bolt heads and nuts bearing on timber shall utilize dock washers.

2.3.2 Embedded Anchors

2.3.2.1 Anchor Rods

ASTM A449 Type 1 or ASTM F1554 grade 105.

2.3.2.2 Anchor Nuts

ASTM A563, Grade A, hex style.

2.3.2.3 Anchor Washers

ASTM F436.

2.3.2.4 Plate Washers

ASTM A36/A36M.

2.3.3 Tie Rods

Tie rods shall be epoxy-coated 75 or 80 ksi all-thread rod, in accordance with ASTM A615/A615M and ASTM A775/A775M. Tie-rod system components, including articulated joints, turnbuckles, and anchorage hardware shall be epoxy-coated, coal-tar coated, or hot-dip galvanized as specified by the tie rod system manufacturer, and shall develop 100% of the tensile capacity of the tie rods. See 31 68 13 TIE RODS for additional requirements.

2.4 STRUCTURAL STEEL ACCESSORIES

2.4.1 Welding Electrodes and Rods

AWS D1.1/D1.1M.

2.4.2 Non-Shrink Grout

In accordance with section 03 62 16.00

2.5 GALVANIZING

All structural steel components and hardware shall be hot-dip galvanized, unless otherwise noted in these specifications to receive an alternative coating system or to be plain steel. Galvanizing shall be in accordance with ASTM F2329 for hardware and threaded parts excluding tie-rods,and ASTM A123/A123M or ASTM A153/A153M for plates, angles, pipe, and other steel components, as applicable. Galvanize after fabrication to the maximum extent practicable.

2.6 FABRICATION

Fabrication must be in accordance with the applicable provisions of AISC 325. Fabrication and assembly must be done in the shop to the greatest extent possible. Punch, subpunch and ream, or drill bolt holes perpendicular to the surface of the member. The fabricating plant shall be certified under

the AISC 201 for Category STD structural steelwork.

Compression joints depending on contact bearing must have a surface roughness not in excess of 500 micro inch as determined by ASME B46.1, and ends must be square within the tolerances for milled ends specified in ASTM A6/A6M.

Shop splices of members between field splices will be permitted only where indicated on the Contract Drawings. Splices not indicated require the approval of the Owner's Representative.

2.6.1 Markings

Prior to erection, members must be identified by a painted erection mark. Connecting parts assembled in the shop for reaming holes in field connections must be match marked with scratch and notch marks. Do not locate erection markings on areas to be welded. Do not locate match markings in areas that will decrease member strength or cause stress concentrations.

2.7 DRAINAGE HOLES

Adequate drainage holes must be drilled to eliminate water traps. Hole diameter must be 1/2 inch and location must be indicated on the detail drawings. Hole size and location must not affect the structural integrity.

PART 3 EXECUTION

3.1 ERECTION

3.1.1 STORAGE

Material must be stored out of contact with the ground in such manner and location as will minimize deterioration.

3.2 CONNECTIONS

Except as modified in this section, connections not detailed must be designed in accordance with AISC 360. Build connections into existing work. Do not tighten anchor bolts set in concrete with impact torque wrenches. Holes must not be cut or enlarged by burning. Bolts, nuts, and washers must be clean of dirt and rust, and lubricated immediately prior to installation.

3.2.1 Common Grade Bolts

ASTM A307 bolts must be tightened to a "snug tight" fit. "Snug tight" is the tightness that exists when plies in a joint are in firm contact. If firm contact of joint plies cannot be obtained with a few impacts of an impact wrench, or the full effort of a man using a spud wrench, contact the Owner's Representative for further instructions.

3.3 GAS CUTTING

Use of gas-cutting torch in the field for correcting fabrication errors will be permitted on minor members not under stress only after approval has been obtained from the Owner's Representative.

3.4 WELDING

Welding must be in accordance with AWS D1.1/D1.1M. Provide AWS D1.1/D1.1M qualified welders, welding operators, and tackers.

Develop and submit the Welding Procedure Specifications (WPS) for all welding, including welding done using prequalified procedures. Prequalified procedures may be submitted for information only; however, procedures that are not prequalified must be submitted for approval.

3.4.1 Removal of Temporary Welds, Run-Off Plates, and Backing Strips

Remove only from finished areas.

3.5 GALVANIZING REPAIR

Repair and recoat zinc coating which has been field or shop cut, burned by welding, abraded, or otherwise damaged to such an extent as to expose the base metal. Thoroughly clean the damaged area by wire brushing and remove traces of welding flux and loose or cracked zinc coating prior to painting. Paint cleaned area with two coats of zinc oxide-zinc dust paint conforming to ASTM A780/A780M and MIL-P-21035. Compound paint with a suitable vehicle in a ratio of one part zinc oxide to four parts zinc dust by weight. Do not heat surfaces to which repair paint has been applied.

3.6 EPOXY COATING REPAIR

Repair and recoat epoxy coating which has been field or shop cut, burned by welding, abraded, or otherwise damaged to such an extent as to expose the base metal. Thoroughly clean the damaged area by wire brushing and remove traces of welding flux and loose or cracked coating prior to painting. Paint cleaned area with an field-applied epoxy coating system in accordance with ASTM A775/A775M. Do not heat surfaces to which repair paint has been applied.

3.7 FIELD QUALITY CONTROL

Perform field tests, and provide labor, equipment, and incidentals required for testing, except that electric power for field tests will be furnished as set forth in Division 1. The Owner's Representative must be notified in writing of defective welds, bolts, nuts, and washers within 7 working days of the date of the inspection.

3.7.1 Welds

3.7.1.1 Visual Inspection

AWS D1.1/D1.1M. Furnish the services of AWS-certified welding inspectors for fabrication and erection inspection and testing and verification inspections.

Inspect proper preparation, size, gauging location, and acceptability of welds; identification marking; operation and current characteristics of welding sets in use.

-- End of Section --

SECTION 26 42 00.00

SOIL SIDE IMPRESSED CURRENT CATHODIC PROTECTION SYSTEM SPECIFICATIONS
06/20

PART 1 GENERAL

Subject to the General and Supplementary Conditions, this section includes the supply of all labor, equipment, materials, and incidentals for a cathodic protection system on the landward side of the bulkhead, including but not limited to the following work:

A. Install six deep well linear anode cathodic protection systems to cathodically protect the steel bulkhead wall associated with Berth 6 at the Port of Port Arthur in Port Arthur, Texas.

B. There are to be six new air-cooled rectifiers installed as part of this work.

C. Energize, adjust, and inspect the cathodic protection system after installation.

D. The cathodic protections systems shall be installed, energized and tested by a Contractor regularly engaged in the field of cathodic protection and have an accepted and successful documented history of system installations.
1. The Contractor must provide all labor, materials, and supervision for the installation of the cathodic protection system.
2. The Contractor must have at least five (5) years of verifiable experience in the installation of marine CP systems.

E. The Contractor shall maintain at all times during construction work, a qualified Project Manager on-site to direct the construction activities, and to interface with the Owner and the Engineer, as required.

F. Contractor to make themselves available for weekly meetings with the Port and the Port's representatives.

G. The on-site Project Manager shall have at minimum the following credentials:
1. National Association of Corrosion Engineer Cathodic Protection Technician
2. The Project Manager must have five (5) years of experience in installing and servicing CP systems on marine structures.

H. The contractor shall secure the services of a National Association of Corrosion Engineers certified CP Specialist (CPS).
1. The CP Specialist shall be a subcontractor and be independent of and not otherwise affiliated with the Contractor, or the manufacturer or distributor of CP products or materials used in the project.

I. Contractor shall provide Quality Assurance for every phase of the CP installation.

J. The owner shall be responsible for furnishing and/or installing a storage area for materials.

K. Details of proposed departures due to actual field conditions and/or other causes shall be submitted to the Engineer for approval prior to any construction deviation being taken.

1.1 REFERENCES

ASTM INTERNATIONAL (ASTM)

ASTM B265	(2020) Standard Specification for Titanium and Titanium Alloy Strip, Sheet, and Plate
ASTM B338	(2010) Standard Specification For Seamless And Welded Titanium And Titanium Alloy Tubes For Condensers And Heat Exchangers

UNDERWRITERS LABORATORIES (UL)

UL 6	(2007; Reprint Sep 2019) UL Standard for Safety Electrical Rigid Metal Conduit-Steel

NATIONAL FIRE PROTECTION ASSOCIATION (NFPA)

NFPA 70	(2019; TIA 19-1; TIA 19-2; TIA 19-3; TIA 19-4; ERTA 1 2019) National Electrical Code

NACE INTERNATIONAL (NACE)

NACE SP0169	(2013) Control of External Corrosion on Underground or Submerged Metallic Piping Systems

1.2 SUBMITTALS

Contractor shall provide submittals in conformance with the requirements of the General and Supplementary Conditions, and in accordance with Section 01 33 00 SUBMITTAL PROCEDURES. Submit the following:

SD-01 Preconstruction Submittals

QA/QC Plan

SD-03 Product Data

Impressed Current Anodes

Rectifiers

Deep Well Anode

Backfill

Conduits And Fittings

Subexothermic Welds

SD-06 Test Reports

Electrical Continuity Verification

Pre-Installation Potential Measurement

Interference

Energizing And Testing

Final Testing

SD-11 Closeout Submittals

Identified Utilities

Report

1.3 RELATED SECTIONS

Drawings and general provisions of the Contract, including General and Supplementary Conditions and other Division 01 Specification Sections, apply to this Section. Other technical specification sections that may relate to this section, include but are not limited to the following:

A. Section 26 00 01.05 - BASIC ELECTRICAL REQUIREMENTS
B. Section 26 42 00.01 - WATER SIDE IMPRESSED CURRENT CATHODIC PROTECTION SYSTEM SPECIFICATIONS

1.4 QUALITY CONTROL

Submit a QA/QC plan prior to commencing the CP work. Plan shall address all required tasks to be performed by the CPS as well as test methods and testing instrumentation to be used. Provide the following qualifications in the plan:

1. Contractor conducting the installation, submit qualifications and job reference list and client contact information.
2. Contractor's on-site Project Manager including NACE certification and resume.
3. Corrosion Specialist including NACE certification and resume.

1.5 PERMITS

Prior to the start of construction, the Contractor shall apply to the proper authorities for permits required for installation of the cathodic protection system. This includes but is not limited to filing Form GW-1 with the Texas Railroad Commission.

The contractor shall dial 811 to contact either Texas811 or Lone Star 811 One-Call center in the state of Texas prior to construction to located any existing utilities within the work area. Existing utilities include, but are not limited to, water lines, gas lines, telephone, street lights, sewer and storm drains and overhead and underground electric utilities.

Contactor to note any identified utilities on the as-built plans

1.6 MEASUREMENT AND PAYMENT

No separate payment shall be made for Work under this specification. Payment for Work associated with this specification shall be included in the overall Lump Sum project cost.

PART 2 PRODUCTS

2.1 Impressed current anodes

The anodes shall be a 150 ft continuous mixed metal oxide (MMO) coated titanium anode. Each anode well shall be capable of a minimum current output of 30 A for 20 years of service.

1. Matcor's Durammo Deep Anode system Type M or approved equal.
2. The primary anode will incorporate a continuous titanium substrate with a thermally applied inert dimensionally stable, catalyzed, electrically conductive iridium/tantalum composition mixed metal oxide coating.
3. Anode substrate: The substance shall be titanium, certified to conform to Grade 1 as defined within specification reference ASTM B338, ASTM B265, Din 3.7025, 3.7035.

Grade 1	(%)
Nitrogen	max 0.03
Carbon	max 0.08
Hydrogen	max 0.015
Iron	max 0.3
Oxygen	max 0.18
Residuals	max each 0.1
Residuals	max total 0.4
Titanium	balance

2.2 Backfill

SC 3 calcined petroleum coke, as manufactured by Loresco Inc., or approved equal, shall be used to backfill the impressed current anodes. Anode backfill shall conform to the following:

Typical Composition

Component	Percentage
Carbon	99.35
Ash	0.6
Volatiles	0
Moisture	0.05

2.3 Well Hardware

A. The deep well anode shall be equipped with a Schedule 40 PVC casing.
1. The casing shall be 10 inches diameter, and 10 feet long minimum.
2. Casing sealant shall be Bentonite Product NSF 61 approval.
3. The casing end shall be terminated with a 10" diameter, Schedule 40 PVC cap.

B. PVC vent pipe shall be used from the bottom of the linear anode to the surface for dissipating gases.
1. The plastic vent pipe shall be 1-inch diameter slotted piping.
2. The plastic vent pipe shall extend above the well cap and the vent outlet shall be screened and installed in an inverted manner.

2.4 Anode Header Wire

1. Anode header wire shall be #1/0 HMWPE with red insulation.
2. Negative header wire shall be #1/0 HMWPE with black insulation.

2.5 Rectifiers

a. DC rated for 100 V and 50 Amps.
2. AC input is 3 Phase.
3. Voltage adjustment utilizing coarse and fine taps.
4. AC circuit breaker to provide overload and short circuit protection.
5. Enclosure shall be galvanized steel per ASTM 123.
6. Rectifier shall have analog ammeter and voltmeter.
7. All rectifier units shall bear the manufacturers nameplate and not be re-branded.

2.6 Conduits and fittings

1. The minimum conduit size shall be 2 inch unless otherwise indicated. Refer to NFPA 70 (NEC) for additional conduit size requirements.
2. Conduit and fittings placed below grade shall be PVC, Schedule 80.
3. Conduit and fittings placed above grade shall be rigid steel. Rigid Steel conduit shall be galvanized conforming to UL 6.
4. For buried conduit a warning tape shall be buried above it. The warning and identification tape shall be an inert plastic film designed for prolonged underground use. The tape shall be a minimum of 3 inches wide and a minimum of 4 mils thick. The tape shall be continuously printed over the entire length with the wording "CAUTION: CATHODIC PROTECTION CABLE BURIED BELOW". The wording shall be printed using bold black letters. The color of the tape shall be red.

2.7 SubExothermic welds

Exothermic welds shall be in accordance with the manufacturer's recommendations, and shall be Cadweld, as manufactured by Erico Products, Inc. or Thermoweld as manufactured by continental Industries, Inc. or approved equivalent.

PART 3 EXECUTION

3.1 Construction Coordination Schedule Sequencing

The Contractor shall coordinate his/her work to maintain an open and accessible trafficway for all Port roadways.

The Contractor shall not interfere with Owner's operations and schedule work around vessels at the berths.

3.2 Storage

All materials and equipment to be used in construction shall be stored in such a manner to be protected from detrimental effects from the elements.

3.3 Inspection

Identify location of bulkhead wall tie backs and verify that well is centered between the tieback. Tie-backs are at approximate 9-foot spacing.

3.4 Electrical continuity verification

1. Contractor shall verify all pipe piles and sheet piles in the bulkhead wall are electrically continuous. If sheet piles are found to be electrically isolated then continuity corrections are to be made by Contractor
2. Contractor shall submit procedure for electrical continuity testing and continuity corrections to Engineer for approval and shall submit report detailing results of electrical continuity testing to Engineer.

3.5 PRE-INSTALLATION STRUCTURE-TO-SOIL POTENTIAL MEASUREMENTS OF THE BULKHEAD WALL.

The Contractor shall measure potentials along the bulkhead wall with an Owner in attendance.

1. The measurements shall be conducted at every test station ~~every 50 feet~~ along the bulkhead wall length.
2. Measurements shall be conducted by ~~placing~~ lowering the reference electrode connected to the negative terminal of the multi-meter ~~on the surface of the concrete slab~~down into the test station until the reference electrode contacts the underlying soil, while the lead from the positive terminal of the multi-meter is connected to the ~~piling~~ structure terminal of the test station.
3. Contractor shall use a copper-copper sulfate reference electrode.
4. Contactor shall submit pre-installation potential measurement report to Engineer.

3.6 WELL DRILLING

1. The Contractor shall obtain and pay for all fees and permits required for well drilling.
2. The Contractor shall protect the well bore from the intrusion of contaminants into the hole at all times.
3. The Contractor is responsible for the cost of all cleanup associated with contamination of the well and/or job site resulting from the Contractor's work.
4. Fresh water shall be circulated from the bottom of the hole to

clear the well of drilling mud and cuttings after the well is drilled.
5. Loading of anodes and other equipment in the well shall be done in the presence of the CPS. Loading of the anodes into the well shall be a continuous operation from start of loading anode to completion of backfilling.
6. The well shall be covered with a steel trench plate whenever the well is left unattended.

3.7 WELL CASING

The contractor shall install 10" diameter PVC Sch 40 casing with cap.

3.8 VENT PIPE

1. The bottom of the vent pipe shall be securely capped.

2. The top of the vent pipe shall be temporarily sealed during the coke breeze loading process. Any foreign material entering the vent pipe shall be removed.

3.9 LOADING THE ANODE

The CPS shall visually inspect the anode lead for abrasion or other damage as the anode is lowered into place. A damaged anode is not acceptable and shall not be installed.

3.10 COKE BREEZE BACKFILL

Coke backfill shall be placed using a slurry pump which pumps the coke into the bottom of the hole, filling the well from the bottom up.

1. Coke shall not be pumped through the vent pipe.
2. Coke breeze shall be mixed with water when introduced into the hole to prevent bridging or the creation of voids. At the time of introduction of the backfill, the hole shall contain sufficient water to minimize bridging and the rate of introduction of the backfill shall be controlled to minimize the possibility of bridging. In the event that voids or bridging does occur, the Contractor shall correct the deficiency to the satisfaction of the CPS.
3. Coke breeze shall be placed in the hole at a steady rate to ensure that the coke breeze does not bridge or block the hole. The hole shall be kept completely full of water during placement of backfill.
4. Coke shall be allowed 24 hours to settle. After 24 hours, the coke column shall be topped off as required to achieve the specified coke column length.
5. The contractor shall record the total weight of coke breeze placed in each anode well.

3.11 DISPOSAL OF DRILLING FLUIDS, CUTTINGS AND MUD

Drilling mud and cuttings shall be disposed of by the Contractor at a suitable disposal site.

3.12 NEGATIVE STRUCTURE CONNECTION

Each of the six rectifiers will require two negative structure connections.

1. The structure leads are to be #1/0 AWG, stranded, copper, single conductor with high molecular weight polyethylene insulation (HMWPE).

2. The test leads are to be thermite welded to a 4" x 4" x 1/4" thick steel plate. Prior to the thermite welding process, the 4" square plate shall be cleaned to SP 10 near-white blast cleaning.
3. The bulkhead wall where the plate is to be welded shall be cleaned to SP 10 near-white blast cleaning.
4. The area on the bulkhead wall that is to be cleaned shall be an area that is a minimum of 12" square.
5. The 4" square plate is to be double pass welded a full 360 degrees around the plate to the bulkhead wall face. The plate is to be centered in the 12" square blasted area.
6. The entire area on the bulkhead wall cleaned and the welded steel plate are to be coated with Alocit 28.15 to a 24-mil thickness, or approved equal.
7. The coating shall be applied by a factory certified applicator.

3.13 HOT WORK

Hot work is defined as any work activity which could serve as an ignition source for any flammable material. Examples of hot work include, but are not limited to, welding, brazing, burning, grinding, saw cutting, sandblasting, chiseling concrete, or other impact cutting; pneumatic or electric powered drilling; open flames; use of explosive ramsets; use of non-explosion proof electrical equipment (heaters, electric tools, motors and lights) and operating motorized equipment.

1. The contractor Shall notify the Owner at least 24 hours in advance of the time that a hot work permit is needed for each work site.
2. It is a standard safety policy that no hot work will be allowed within 500 feet of any diesel ship during loading operations. This minimum distance may be increased by the Owner whenever a reasonable possibility exists that an external source of hydrocarbon, usually from upwind or from nearby diesel loading operations, could cause a change in conditions which could create an immediate hazard or unsafe condition.
3. The Contractor shall schedule all hot work around the diesel loading operations for which a daily ship schedule is available from the Owner. No hot work will be allowed in the area affected by the loading of petroleum ships.
4. In the event that the Contractor is working in an area which becomes hazardous or unsafe, they will immediately shut down all work when so directed by the Owner or its Engineer. The Contractor shall coordinate their work schedule closely with the Port's shipping schedule. Port operations take precedence over construction work.

3.14 RECTIFIER

1. Coordinate location and mounting of the six new rectifiers with the Port.
2. Submit to Engineer shop drawing indicating rectifier mounting procedure.
3. Contractor to provide 3 phase power to all of the new rectifiers.
4. Contractor's electrician shall coordinate power needs for new rectifiers with Owner.

3.15 INTERFERENCE

In case of interference with other work or incompatible locations with respect to equipment or structures, the Contractor shall furnish all labor and materials necessary to resolve the interference and complete the work

in an acceptable manner. Contractor with support from CPS shall submit locations of interference and proposed resolution to Owner for review and approval prior to commencing deviation from contract documents

3.16 ENERGIZING AND TESTING

Upon completion of the installation, the contractor shall provide testing of the completed system by the CPS to ensure conformance with the Contract Documents and NACE SP0169.

1. Measure and record the energized bulkhead to soil potentials ~~at intervals of 50 feet~~ per Section 3.5 of these specifications along the wall.
2. Perform E log I testing of each rectifier
3. The Contractor shall provide a written report, prepared by the CPS, documenting the results of the testing and recommending corrective work, as required to comply with the Contract Documents. The contractor is responsible for any required corrective action. The CPS shall review and approve any corrective actions. The written report shall be submitted to the Owner for review and approval before acceptance of the CP system.

3.17 FINAL TESTING

Upon completion of the installation, the contractor shall provide testing of the completed system by the CPS to ensure conformance with the Contract Documents and NACE SP0169.

1. Measure and record the energized bulkhead to soil potentials ~~at intervals of 50 feet~~ per Section 3.5 of these specifications along the wall.
2. Perform E log I testing of each rectifier
3. The Contractor shall provide a written report, prepared by the CPS, documenting the results of the testing and recommending corrective work, as required to comply with the Contract Documents. The contractor is responsible for any required corrective action.
4. The CPS shall review and approve any corrective actions. The written report shall be submitted to the Owner for review and approval before acceptance of the CP system and contract time stops.
5. The CPS shall return to site to perform testing in accordance with NACE SP0169 to verify that the CP system is providing cathodic protection per the criteria identified in section 6 of NACE SP0169. Return visit should be at minimum 60 days after system activation but not more than 90 days. If the system is not meeting NACE criteria, CPS will determine why and make necessary adjustments with support from the contractor as needed.

3.18 REPORT

The CP Specialist shall submit a Final Report showing all test data and energizing parameters, including but not limited to static and energized potentials using portable reference electrodes, anode to cathode resistance, depolarization test, and E log I curves.

In the final report, the CPS shall note any unapproved deviations from the Contract Documents that pertain to the CP system, along with the approved RFI's and submittals for the approved deviations. The CPS shall submit a notarized document and final report certifying the proper installation and operation of the CP system. The Project shall not be considered completed

until such documentation is submitted and approved by the Engineer. The report and all data shall be in pdf format and be submitted to the Engineer.

-- End of Section --

SECTION 26 42 00.01

WATER SIDE IMPRESSED CURRENT CATHODIC PROTECTION SYSTEM SPECIFICATIONS
06/20

PART 1 GENERAL

Subject to the General and Supplementary Conditions, this section includes the supply of all labor, equipment, materials, and incidentals for a cathodic protection system on the water side of the bulkhead, including but not limited to the following work:

A. Install a waterside cathodic protection system to cathodically protect the steel combi-wall bulkhead wall associated with Berth 6 at the Port of Port Arthur (Port) in Port Arthur.

B. There are to be four new air-cooled rectifiers installed as part of this work.

C. Energize, adjust, and inspect the cathodic protection system after installation.

D. The cathodic protections systems shall be installed, energized and tested by a Contractor regularly engaged in the field of cathodic protection and have an accepted and successful documented history of system installations.
1. The Contractor must provide all labor, materials, and supervision for the installation of the cathodic protection system.
2. The Contractor must have at least five (5) years of verifiable experience in the installation of marine CP systems.

E. The Contractor shall maintain at all times during construction work, a qualified Project Manager on-site to direct the construction activities, and to interface with the Owner and the Engineer, as required.

F. Contractor to make themselves available for weekly meetings with the Port and the Port's representatives.

G. The on-site Project Manager shall have at minimum the following credentials:
1. National Association of Corrosion Engineer Cathodic Protection Technician
2. The Project Manager must have five (5) years of experience in installing and servicing CP systems on marine structures.

H. The contractor shall secure the services of a National Association of Corrosion Engineers (NACE) certified CP Specialist (CPS).
1. The CP Specialist shall be a subcontractor and be independent of and not otherwise affiliated with the Contractor, or the manufacturer or distributor of CP products or materials used in the project.

I. Contractor shall provide Quality Assurance for every phase of the CP installation.

J. The owner shall be responsible for furnishing and/or installing a storage area for materials.

K. Details of proposed departures due to actual field conditions and/or other causes shall be submitted to the Engineer for approval prior to any construction deviation being taken.

1.1 REFERENCES

UNDERWRITERS LABORATORIES (UL)

NATIONAL FIRE PROTECTION ASSOCIATION (NFPA)

NFPA 70	(2019; TIA 19-1; TIA 19-2; TIA 19-3; TIA 19-4; ERTA 1 2019) National Electrical Code

NACE INTERNATIONAL (NACE)

NACE SP0169	(2013) Control of External Corrosion on Underground or Submerged Metallic Piping Systems

UNDERWRITERS LABORATORIES (UL)

UL 6	(2007; Reprint Sep 2019) UL Standard for Safety Electrical Rigid Metal Conduit-Steel

1.2 SUBMITTALS

Contractor shall provide submittals in conformance with the requirements of the General and Supplementary Conditions, and in accordance with Section 01 33 00 SUBMITTAL PROCEDURES. Submit the following:

SD-01 Preconstruction Submittals

QA/QA Plan

SD-03 Product Data

Impressed Current Anodes

Rectifiers

Deep Well Anode

Backfill

Conduits And Fittings

Subexothermic Welds

SD-06 Test Reports

Preinstallation Testing

Pre-Installation Potential Measurement

Interference

Energizing And Testing

Final Testing

Final Report

SD-11 Closeout Submittals

Identified Utilities

Report

1.3 RELATED SECTIONS

Drawings and general provisions of the Contract, including General and Supplementary Conditions and other Division 01 Specification Sections, apply to this Section. Other technical specification sections that may relate to this section, include but are not limited to the following:

A. Section 26 00 01.05 - BASIC ELECTRICAL REQUIREMENTS
B. Section 26 42 00.00 - WATER SIDE IMPRESSED CURRENT CATHODIC PROTECTION SYSTEM SPECIFICATIONS

1.4 QUALITY CONTROL

Submit a QA/QC plan prior to commencing the CP work. Plan shall address all required tasks to be performed by the CPS as well as test methods and testing instrumentation to be used. Provide the following qualifications in the plan:

1. Contractor conducting the installation, submit qualifications and job reference list and client contact information.
2. Contractor's on-site Project Manager including NACE certification and resume.
3. Corrosion Specialist including NACE certification and resume.

1.5 PERMITS

1. Prior to the start of construction, the Contractor shall apply to the proper authorities for permits required for installation of the cathodic protection system.

2. The contractor shall dial 811 to contact either Texas811 or Lone Star 811 One-Call center in the state of Texas prior to construction to located any existing utilities within the work area. Existing utilities include, but are not limited to, water lines, gas lines, telephone, street lights, sewer and storm drains and overhead and underground electric utilities.

3. Contactor to note any identified utilities on the as-built plans

1.6 METHOD OF MEASUREMENT

The quantity of the CP system to be paid with a unit price contract

1.7 BASIS OF PAYMENT

Cost shall include all equipment, labor and materials to install the cathodic protection including continuity test and corrections, electrical work, and all other incidentals necessary to install and energize the cathodic protection system. Payment is full compensation for this

operation including materials and/or incidentals related to this work

PART 2 PRODUCTS

2.1 IMPRESSED CURRENT ANODES

Description: The anodes shall be PW3-X Platinum core manufactured by Matcor or approved equal for hanging anodes under dock.

2.2 ANODE HEADER WIRE

Anode header wireshall be #1/0 HMWPE with red insulation.

2.3 CONDUITS AND FITTINGS

1. The minimum conduit size shall be 2 inch unless otherwise indicated. Refer to NFPA 70 (NEC) for additional conduit size requirements.
2. Conduit and fittings placed below grade shall be PVC, Schedule 80.
3. Conduit and fittings placed above grade shall be rigid steel. Rigid Steel conduit shall be galvanized conforming to UL 6.
4. For buried conduit a warning tape shall be buried above it. The warning and identification tape shall be an inert plastic film designed for prolonged underground use. The tape shall be a minimum of 3 inches wide and a minimum of 4 mils thick. The tape shall be continuously printed over the entire length with the wording "CAUTION: CATHODIC PROTECTION CABLE BURIED BELOW". The wording shall be printed using bold black letters. The color of the tape shall be red.

2.4 EXOTHERMIC WELDS

Exothermic welds shall be in accordance with the manufacturer's recommendations, and shall be Cadweld, as manufactured by Erico Products, Inc. or Thermoweld as manufactured by continental Industries, Inc. or approved equivalent.

2.5 RECTIFIERS

Install 4 air-cooled rectifiers, DC rated for a minimum of 30 V and 130 Amps; AC input is 3 Phase.

PART 3 EXECUTION

3.1 CONSTRUCTION COORDINATION SCHEDULE SEQUENCING

The Contractor shall coordinate his/her work to maintain an open and accessible trafficway for all Port roadways.

The Contractor shall not interfere with Owner's operations and schedule work around vessels at the berths. Port operation supersede contractors operations.

3.2 STORAGE

All materials and equipment to be used in construction shall be stored in such a manner to be protected from detrimental effects from the elements.

3.3 PREINSTALLATION TESTING

1. Measure and record native bulkhead wall to water potentials at intervals of 50 feet along the wall by utilizing structure connections in test stations along the wharf.
2. Perform with an Owner representative in attendance.
3. Confirm electrical continuity of the bulkhead wall and make any corrections necessary.

3.4 ANODE INSTALLATION

1. Hang the anodes from the underside of pier
2. The CPS shall visually inspect the anode lead wire for abrasion or other damage to the insulation and wire. Anodes with damaged insulation or wire are not acceptable and shall not be installed. Splices are not allowed on the anode wire.
3. Cadweld all hanging anodes to new header wire.
4. Connect and secure a 25-pound dead weight to each anode without causing damage to the anode.

3.5 NEGATIVE STRUCTURE CONNECTION

1. The structure leads are to be #1/0 AWG, stranded, copper, single conductor with high molecular weight polyethylene insulation (HMWPE).
2. The test leads are to be thermite welded to a 4" x 4" x 1/4" thick steel plate. Prior to the thermite welding process, the 4" square plate shall be cleaned to SP 10 near-white blast cleaning.
3. The bulkhead wall where the plate is to be welded shall be cleaned to SP 10 near-white blast cleaning.
4. The area on the bulkhead wall that is to be cleaned shall be an area that is a minimum of 12" square.
5. The 4" square plate is to be double pass welded a full 360 degrees around the plate to the bulkhead wall face. The plate is to be centered in the 12" square blasted area.
6. The entire area on the bulkhead wall cleaned and the welded steel plate are to be coated with Alocit 28.15 to a 24-mil thickness, or approved equal.
7. The coating shall be applied by a factory certified applicator.

3.6 HOT WORK

Hot work is defined as any work activity which could serve as an ignition source for any flammable material. Examples of hot work include, but are not limited to, welding, brazing, burning, grinding, saw cutting, sandblasting, chiseling concrete, or other impact cutting; pneumatic or electric powered drilling; open flames; use of explosive ramsets; use of non-explosion proof electrical equipment (heaters, electric tools, motors and lights) and operating motorized equipment.

1. The contractor Shall notify the Owner at least 24 hours in advance of the time that a hot work permit is needed for each work site.
2. It is a standard safety policy that no hot work will be allowed within 500 feet of any diesel ship during loading operations. This minimum distance may be increased by the Owner whenever a reasonable possibility exists that an external source of hydrocarbon, usually from upwind or from nearby diesel loading operations, could cause a change in conditions which could create an immediate hazard or unsafe condition.
3. The Contractor shall schedule all hot work around the diesel

loading operations for which a daily ship schedule is available from the Owner. No hot work will be allowed in the area affected by the loading of petroleum ships.

4. In the event that the Contractor is working in an area which becomes hazardous or unsafe, they will immediately shut down all work when so directed by the Owner or its Engineer. The Contractor shall coordinate their work schedule closely with the Port's shipping schedule. Port operations take precedence over construction work.

3.7 INTERFERENCE

In case of interference with other work or incompatible locations with respect to equipment or structures, the Contractor shall furnish all labor and materials necessary to resolve the interference and complete the work in an acceptable manner. Contractor with support from CPS shall submit locations of interference and proposed resolution to Owner for review and approval prior to commencing deviation from contract documents

3.8 EXOTHERMIC WELDS

1. All anode wires shall be connected to the primary header wire through exothermic welding.
2. Coating materials shall be removed from the surface over an area of sufficient size to make the connection. The surface shall be cleaned to bare metal by grinding or filing prior to welding the conductor. Only enough insulation shall be removed such that the copper conductor can be placed in the welding mold.
3. The Contractor shall be responsible for testing all test lead and bond wire welds.
4. After the weld has cooled, all slag shall be removed and the metallurgical bond shall be tested for adherence by the Contractor. A 22-ounce hammer shall be used for adherence testing by striking a blow to the weld. Care shall be taken to avoid hitting the wires. All defective welds shall be removed and replaced at Contractor's expense.
5. All exposed surfaces of the copper and steel shall be covered with insulating materials.

3.9 FINAL TESTING

1. Upon completion of the installation, the contractor shall provide testing of the completed system by the CPS to ensure conformance with the Contract Documents and NACE SP0169.
2. Measure and record the energized bulkhead to water potentials at intervals of 50 feet along the wall per Section 6.3 of these specifications.
3. Perform E log I testing of each rectifier
4. The Contractor shall provide a written report, prepared by the CPS, documenting the results of the testing and recommending corrective work, as required to comply with the Contract Documents. The contractor is responsible for any required corrective action. The CPS shall review and approve any corrective actions. The written report shall be submitted to the Owner for review and approval before acceptance of the CP system and contract time stops.
5. The CPS shall return to site to perform testing in accordance with NACE SP0169 to verify that the CP system is providing cathodic protection per the criteria identified in section 6 of NACE SP0169. Return visit should be at minimum 60 days after system activation but not more than 90 days. If the system is not meeting NACE criteria, CPS will determine why and make necessary adjustments with support from the

contractor as needed.

3.10 REPORT

3.10.1. The CP Specialist shall submit a Final Report showing all test data and energizing parameters, including but not limited to static and energized potentials using portable reference electrodes, anode to cathode resistance, depolarization test, and E log I curves.

3.10.2. In the final report, the CPS shall note any unapproved deviations from the Contract Documents that pertain to the CP system, along with the approved RFI's and submittals for the approved deviations. The CPS shall submit a notarized document and final report certifying the proper installation and operation of the CP system. The Project shall not be considered completed until such documentation is submitted and approved by the Engineer. The report and all data shall be in pdf format and be submitted to the Engineer

-- End of Section --

SECTION 31 05 19

GEOTEXTILE
08/08

PART 1 GENERAL

Subject to the General and Supplementary Conditions, this section includes the supply of all labor, equipment, materials, and incidentals for geotextile material.

1.1 REFERENCES

The publications listed below form a part of this specification to the extent referenced. The publications are referred to within the text by the basic designation only.

ASTM INTERNATIONAL (ASTM)

ASTM D4354	(2012) Sampling of Geosynthetics for Testing
ASTM D4355/D4355M	(2014) Deterioration of Geotextiles from Exposure to Light, Moisture and Heat in a Xenon-Arc Type Apparatus
ASTM D4759	(2011; R 2018) Standard Practice for Determining the Specification Conformance of Geosynthetics
ASTM D4873/D4873M	(2017) Standard Guide for Identification, Storage, and Handling of Geosynthetic Rolls and Samples

1.2 SUBMITTALS

Contractor shall provide submittals in conformance with the requirements of the General and Supplementary Conditions, and in accordance with Section 01 33 00 SUBMITTAL PROCEDURES. Submit the following:

SD-03 Product Data

Manufacturing Quality Control Sampling and Testing

SD-04 Samples

Quality Assurance Samples and Tests

SD-07 Certificates

Geotextile

1.3 RELATED SECTIONS

Drawings and general provisions of the Contract, including General and Supplementary Conditions and other Division 01 Specification Sections,

apply to this Section. Other technical specification sections that may relate to this section, include but are not limited to the following:

A. Section 31 20 00.00 - EARTH MOVING
B. Section 31 23 13.00 - EXCAVATION AND GRADING
C. Section 35 20 25.10 - ARTICULATED CONCRETE MATS

1.4 DELIVERY, STORAGE, AND HANDLING

Deliver, store, and handle geotextile in accordance with ASTM D4873/D4873M.

1.4.1 Delivery

Notify the Owner's Representative a minimum of 24 hours prior to delivery and unloading of geotextile rolls packaged in an opaque, waterproof, protective plastic wrapping. The plastic wrapping shall not be removed until deployment. If quality assurance samples are collected, immediately rewrap rolls with the plastic wrapping. Geotextile or plastic wrapping damaged during storage or handling shall be repaired or replaced, as directed. Label each roll with the manufacturer's name, geotextile type, roll number, roll dimensions (length, width, gross weight), and date manufactured.

1.4.2 Storage

Protect rolls of geotextile from construction equipment, chemicals, sparks and flames, temperatures in excess of 160 degrees F, or any other environmental condition that may damage the physical properties of the geotextile. To protect geotextile from becoming saturated, either elevate rolls off the ground or place them on a sacrificial sheet of plastic in an area where water will not accumulate.

1.4.3 Handling

Handle and unload geotextile rolls with load carrying straps, a fork lift with a stinger bar, or an axial bar assembly. Rolls shall not be dragged along the ground, lifted by one end, or dropped to the ground.

1.5 MEASUREMENT AND PAYMENT

No separate payment shall be made for Work under this specification. Payment for Work associated with this specification shall be included in the overall Lump Sum project cost.

PART 2 PRODUCTS

2.1 RAW MATERIALS

A minimum of 7 days prior to scheduled use, submit manufacturer's certificate of compliance stating that the geotextile meets the requirements of this section. For needle punched geotextiles, the manufacturer shall also certify that the geotextile has been continuously inspected using permanent on-line full-width metal detectors and does not contain any needles which could damage other geosynthetic layers. The certificate of compliance shall be attested to by a person having legal authority to bind the geotextile manufacturer.

2.1.1 Geotextile

Geotextile for drainage applications shall be Mirafi 160N non-woven geotextile or approved equal. Geotextile for soil separation shall be Marafi RS380i woven geotextile or approved equal.~~Provide geotextile that is a woven pervious sheet of polymeric material consisting of long-chain synthetic polymers composed of at least 95 percent by weight polyolefins, polyesters, or polyamides. The use of woven slit film geotextiles (i.e. geotextiles made from yarns of a flat, tape-like character) will not be allowed. Add stabilizers and/or inhibitors to the base polymer, as needed, to make the filaments resistant to deterioration by ultraviolet light, oxidation, and heat exposure. Regrind material, which consists of edge trimmings and other scraps that have never reached the consumer, may be used to produce the geotextile. Post-consumer recycled material shall not be used. Geotextile shall be formed into a network such that the filaments or yarns retain dimensional stability relative to each other, including the edges. Geotextiles shall meet the requirements specified in Table 1. Where applicable, Table 1 property values represent minimum average roll values (MARV) in the weakest principal direction. Values for AOS represent maximum average roll values.~~

~~TABLE 1~~
~~MINIMUM PHYSICAL REQUIREMENTS FOR DRAINAGE GEOTEXTILE~~

~~PROPERTY~~	~~UNITS~~	~~ACCEPTABLE VALUES~~	~~TEST METHOD~~
~~GRAB STRENGTH~~	~~LBS~~	~~180~~	~~ASTM D4632/D4632M~~
~~PUNCTURE~~	~~LBS~~	~~80~~	~~ASTM D6241~~
~~TRAPEZOID TEAR~~	~~LBS~~	~~50~~	~~ASTM D4533/D4533M~~
~~APPARENT OPENING SIZE~~	~~U.S. SIEVE~~	~~80~~	~~ASTM D4751~~
~~PERMITTIVITY~~	~~SEC - 1~~	~~0.20~~	~~ASTM D4491/D4491M~~
~~ULTRAVIOLET DEGRADATION~~	~~PERCENT~~	~~50 AT 500 HRS~~	~~ASTM D4355/D4355M~~

2.2 MANUFACTURING QUALITY CONTROL SAMPLING AND TESTING

The Manufacturer is responsible for establishing and maintaining a quality control program to assure compliance with the requirements of the specification. A minimum of 7 days prior to scheduled use, submit manufacturer's quality control manual. Documentation describing the quality control program shall be made available upon request. Perform manufacturing quality control sampling and testing in accordance with the manufacturer's approved quality control manual. As a minimum, geotextiles shall be randomly sampled for testing in accordance with ASTM D4354, Procedure A. Acceptance of geotextile shall be in accordance with ASTM D4759. Tests not meeting the specified requirements will result in the rejection of applicable rolls.

PART 3 EXECUTION

3.1 QUALITY ASSURANCE SAMPLES AND TESTS

3.1.1 Quality Assurance Samples

Provide assistance to the Owner's Representative in the collection of quality assurance samples for quality assurance testing; assign 7 days in the schedule to allow for testing. Collect samples upon delivery to the site at the request of the Owner's Representative. Identify samples with a waterproof marker by manufacturer's name, product identification, lot number, roll number, and machine direction. The date and a unique sample number shall also be noted on the sample. Discard the outer layer of the geotextile roll prior to sampling a roll. Samples shall then be collected by cutting the full-width of the geotextile sheet a minimum of 3 feet long in the machine direction. Rolls which are sampled shall be immediately resealed in their protective covering.

3.1.2 Quality Assurance Tests

Provide quality assurance samples to an Independent Laboratory. Samples will be tested to verify that geotextile meets the requirements specified in Table 1. Test method ASTM D4355/D4355M shall not be performed on the collected samples. Geotextile product acceptance shall be based on ASTM D4759. Tests not meeting the specified requirements will result in the rejection of applicable rolls.

3.2 INSTALLATION

3.2.1 Subgrade Preparation

The surface underlying the geotextile shall be smooth and free of ruts or protrusions which could damage the geotextile. Subgrade materials and compaction requirements shall be in accordance with Section 31 23 13.00.

3.2.2 Placement

Notify the Owner's Representative a minimum of 24 hours prior to installation of geotextile. Geotextile rolls which are damaged or contain imperfections shall be repaired or replaced as directed. The geotextile shall be laid flat and smooth so that it is in direct contact with the subgrade. The geotextile shall also be free of tensile stresses, folds, and wrinkles. On slopes steeper than 10 horizontal on 1 vertical, lay the geotextile with the machine direction of the fabric parallel to the slope direction.

3.3 SEAMS

3.3.1 Overlap Seams

Continuously overlap geotextile panels a minimum of 24 inches at all longitudinal and transverse joints. Where seams must be oriented across the slope, lap the upper panel over the lower panel.

3.4 PROTECTION

Protect the geotextile during installation from clogging, tears, and other damage. Damaged geotextile shall be repaired or replaced as directed. Use

adequate ballast (e.g. sand bags) to prevent uplift by wind. The geotextile shall not be left uncovered for more than 14 days after installation.

3.5 REPAIRS

Repair torn or damaged geotextile. Clogged areas of geotextile shall be removed. Perform repairs by placing a patch of the same type of geotextile over the damaged area. The patch shall extend a minimum of 24 inches beyond the edge of the damaged area. Patches shall be continuously fastened using approved methods. The machine direction of the patch shall be aligned with the machine direction of the geotextile being repaired. Remove and replace geotextile rolls which cannot be repaired. Repairs shall be performed at no additional cost to the Owner

3.6 PENETRATIONS

Construct engineered penetrations of the geotextile by methods recommended by the geotextile manufacturer.

3.7 COVERING

Do not cover geotextile prior to inspection and approval by the Owner's Representative. Place cover soil in a manner that prevents soil from entering the geotextile overlap zone, prevents tensile stress from being mobilized in the geotextile, and prevents wrinkles from folding over onto themselves. On side slopes, soil backfill shall be placed from the bottom of the slope upward. Cover soil shall not be dropped onto the geotextile from a height greater than 3 feet or as otherwise indicated by the manufacturer. No equipment shall be operated directly on top of the geotextile without approval of the Owner's Representative. Use equipment with ground pressures less than 7 psi to place the first lift over the geotextile. A minimum of 12 inches of soil shall be maintained between full-scale construction equipment and the geotextile. Cover soil material type, compaction, and testing requirements are described in Section 31 23 13.00. Equipment placing cover soil shall not stop abruptly, make sharp turns, spin their wheels, or travel at speeds exceeding 5 mph.

-- End of Section --

SECTION 31 09 16.23

DRIVEN PILE LOAD TESTS
06/20

PART 1 GENERAL

Subject to the General and Supplementary Conditions, this section includes the supply of all labor, equipment, materials, and incidentals required to complete pile load tests of the Prestressed Concrete Piles. The following is a general description of the pile load testing work.

A. The Contractor shall furnish and install (10) ten 24-inch square prestressed concrete test piles, at locations proposed by the contractor and to be approved by the Port, as specified herein, and shall engage a testing firm acceptable to the Owner's Representative who shall perform the High Strain Dynamic Testing with Pile Driving Analyzer (PDA) for these piles. The test piles may be installed at production pile locations, unless otherwise instructed by the Owner's Representative. Of the (10) ten test piles, (2) two of the piles shall be batter piles. Test piles are to driven within the wharf footprint, at locations closest to the reference borings.

B. The Contractor shall also engage a testing firm acceptable to the Owner's Representative who shall measure the ground vibration during the initial installation of the anchor wall sheet piles and bulkhead combi-wall piles as specified on the Drawings. The ground vibration shall be measured at the fuel line location and at any structures within 100-ft of the pile installation.

C. The PDA testing monitoring will be conducted to determine any or all of the following:

1. The safe tension and compression capacities of the piles.
2. The lengths of production piles required for the work.
3. Soil nature and distribution of soil resistance.
4. The driving resistance characteristics of the various soil strata.
5. The amount of work necessary to obtain minimum required pile penetration.
6. The ability of the driving system to do the work without overstressing the piles.
7. The need for point protection.

D. The test piles may be installed at production pile locations, and the Contractor shall use the information obtained from the test pile program to ~~estimate the production pile order lengths. The ordered lengths of the production piles shall consider that variability of the subsurface conditions can occur between test piles~~verify production pile lengths and capacity.

E. The test piles shall be driven at the designated locations and batter unless otherwise instructed by the Owner's Representative.

1.1 REFERENCES

The publications listed below form a part of this specification to the extent referenced. The publications are referred to within the text by the

basic designation only.

ASTM INTERNATIONAL (ASTM)

ASTM D4945	(2017) Standard Test Method for High-Strain Dynamic Testing of Deep Foundations

1.2 SUBMITTALS

Contractor shall provide submittals in conformance with the requirements of the General and Supplementary Conditions, and in accordance with Section 01 33 00 SUBMITTAL PROCEDURES. Submit the following:

SD-01 Preconstruction Submittals

Testing Agency Qualifications

Vibration Monitoring Plan

Pda Test Procedure

~~Weap Analysis~~

SD-03 Product Data

Test Piles

Test Equipment

SD-06 Test Reports

Test Pile Performance Report

SD-11 Closeout Submittals

Test Record Documents

1.3 RELATED SECTIONS

Drawings and general provisions of the Contract, including General and Supplementary Conditions and other Division 01 Specification Sections, apply to this Section. Other technical specification sections that may relate to this section, include but are not limited to the following:

A. Section 31 62 13.20 - PRECAST/PRESTRESSED CONCRETE PILES
B. Section 31 41 16 - STEEL PILE BULKHEAD

1.4 DEFINITIONS

A. High Strain Dynamic Testing (HSDT): Testing performed with Pile Driving Analyzer (PDA) to determine the drivability, pile toe and shaft friction capacity of specified piles, pile integrity and hammer performance. Gauges are attached to pile approximately 3 feet below pile head and connected with cable to monitoring station on ground away from pile. Gauges consist of two accelerometers, two strain transducers, and junction box.

B. Impact Stress: Peak stress at pile head on impact from driving

train as determined from measurements using pile driving analyzer.

C. Permanent Production Piles: Piles incorporated into the Work, utilizing a uniform selection of materials and workmanship, and which are determined acceptable by the Owner's Representative based on observation and pile test results.

D. Test Piles: Piles constructed of same materials and workmanship, and installed as specified for production piles at production pile locations.

1.5 QUALIFICATIONS

PDA and Vibration Monitoring Testing Agency Qualifications: The testing firm shall have at least 5 years' experience in similar testing including installing instrumentation, performing testing, monitoring specified testing, and analyzing data.

1.6 MEASUREMENT AND PAYMENT

No separate payment shall be made for Work under this specification. Payment for Work associated with this specification shall be included in the overall Lump Sum project cost.

PART 2 PRODUCTS

2.1 TEST PILE MATERIALS

All the test piles shall be the same as the production piles as specified on the Contract Drawings.

PART 3 EXECUTION

3.1 ~~WEAP ANALYSIS~~WEAP ANALYSIS

~~For each pile type and pile hammer proposed for the project, complete and submit a Wave Equation Analysis of Pile (WEAP) report, sealed and signed by a professional engineer, registered in the State of Texas, experienced in such work. The analysis shall demonstrate that the pile hammer and driving procedure proposed by the Contractor has sufficient power to drive the piles to the required Ultimate Capacity and Estimated Tip Elevation shown on the plans without exceeding the maximum permitted driving stress values.~~ See Section 31 62 13.20 for Wave Equation Analysis of Pile Driving (WEAP) requirements. WEAP Analysis shall be performed prior to installing test piles and used for determining test pile driving requirements. A refined WEAP Analysis shall be completed for production piles taking into consideration test pile results, and production pile driving criteria and procedures shall be adjusted accordingly.

3.2 PDA TEST PROCEDURE

A. The PDA testing will be witnessed by the Owner's field representative. The Contractor shall not install or test the piles without the presence of the Owner's field representative unless otherwise instructed by the Owner's Representative.

B. When impact hammer is used, the stresses in the piles shall be monitored with the PDA during driving to ensure that the allowable stresses ((0.85f'c - fpe) for compressive driving stresses and fpe for

tension driving stresses) are not exceeded. If necessary, the Contractor shall add additional cushioning, replace the cushions, or reduce the impact hammer stroke to maintain stresses below the maximum allowable. If non-axial driving is indicated by the PDA measurements, the Contractor shall immediately realign the driving system. If the cushion is compressed to the point that a change in alignment of the impact hammer will not correct the problem, the Contractor shall add cushioning or change the cushion as directed by the Owner's Representative.

C. No predrilling or prejetting is allowed in installing the test piles.

D. Only impact hammers should be selected and used for the installation of test and production 24-inch square prestressed concrete piles. The use of vibratory hammer to install prestressed concrete piles are prohibited.

E. The general PDA test procedure is shown as follows. Complete PDA testing in accordance with ASTM D4945:

1. Use impact hammer with PDA monitoring to drive the pile to the design tip elevations. Note that based on the field observation and test data of the piles installed earlier, the Owner's Representative may change the installation methods assigned for the remaining test piles.

2. A new pile cushion shall be used for each pile installation. The pile cushion shall be replaced during driving, if it compresses to more than 50 percent of the original thickness or if it deteriorates or burns during driving. Do not use capblocks or cushions containing asbestos.

The installation method and hammer system used for the test piles shall be used for the installation of the production piles.

3. After the initial installation and testing of the piles, the Contractor shall wait a minimum of 5 days and after the instruments are reattached, shall restrike the piles using impact hammer. A warmed up diesel hammer and a used pile cushion shall be used for a restriking unless in the opinion of the Owner's Representative it is impractical to do otherwise. Generally, the hammer shall be warmed up by applying at least 20 blows to a previously driven pile or to timber mats placed on the ground. Restriking will be for six inches or 50 blows whichever occurs first or as directed by the Owner's Representative.

During the restriking, if the achieved PDA capacity of a pile is less than the required pile ultimate capacity as shown on the Drawings, the Owner's Representative may request the Contractor to drive the pile further.

4. For those piles that require a redriving, the Contractor shall wait additional 5 days after redriving, and after the instruments are reattached, shall restrike the piles using impact hammer with PDA monitoring. Restriking will be for six inches or 50 blows whichever occurs first or as directed by the Owner's Representative.

5. Based on the field observation and test data of the piles tested earlier, the above test procedure may be changed by the Owner's Representative for the remaining test piles. The Owner's Representative also reserves the right to change the pile locations.

6. A CAPWAP, or similar analysis of the dynamic test data, shall be performed on data obtained from the end of initial driving and the beginning of each restrike for each pile. The analysis shall be used to predict pile compression and tension capacities, establish resistance distribution, and predict quake and damping factors.

F. Submit test equipment descriptions and layout. For PDA testing, the descriptions of the test equipment shall include, but not be limited to, details of impact hammer, power plant, leads, cushion material, helmet, templates, procedure proposed to be used for pile driving including any special operational, and PDA equipment.

3.3 VIBRATION MONITORING PROCEDURE

A. The vibration monitoring will be witnessed by the Owner's Representative's field representative. The Contractor shall not install the pile or measure the ground vibration without the presence of the Owner's Representative's field representative unless otherwise instructed by the Owner's Representative.

B. Vibration sensors shall be appropriately anchored in the ground. At least one downhole vibration sensor shall be installed within 2-ft above the crown of the fuel line.

C. Peak particle velocity (PPV) from various vibration sensors shall be recorded throughout the installation of the deadman and bulkhead combiwall piles.

D. Contractor shall submit a vibration The vibration monitoring plan shall include, but not be limited to, the following items:

1. The name of vibration monitoring specialist(s).
2. Submit proof and details, as references, of two projects in the past five years where the vibration monitoring consultant performing the work has satisfactorily monitored construction operations by recording maximum peak particle velocities (PPVs).
3. Submit information on the required 3-component seismograph, capable of measuring particle velocity data in three mutually perpendicular directions, including: the manufacturer's name, model number, and documentation of factory calibration performed within the last 12 months.
4. The proposed locations of vibration sensors to be anchored in the ground.
5. Details for anchoring the vibration sensors.
6. The procedure for tracking peak particle velocity throughout the driving of the test pile.

3.4 ~~RECORD DATA~~TEST PILE PERFORMANCE REPORT

Upon satisfactory completion of each dynamic load test a minimum of three copies of a Test Pile Performance Report shall be submitted for the

Contractor by the Contractor's Geotechnical Consultant. The submittal shall be prepared and sealed by a Professional Engineer registered in the State of Texas and shall be made within three working days of the completion of the dynamic load test. Reports shall include the following, at a minimum:

A. Record for each PDA test pile installed and tested, include minimum:

1. High Strain Dynamic Testing Report: In accordance with referenced standard for test performed.

2. Pile installation record.

3. Pile length.

4. Number of hammer blows-per-foot of penetration.

5. Resistance in blows-per-inch of last 12 inches of end of initial pile driving.

6. Resistance in blows-per-inch of first 6 inches of beginning of restrike driving.

7. Resistance in kips for every five (5) hammer blow during pile installation and for every hammer blow during pile restrike.

8. Compressive and tensile stresses in the pile for every PDA record.

9. BTA and LTD values for every PDA record.

10. Hammer stroke, and rate of operation during driving.

11. Maximum transferred energy

12. Unusual occurrence(s) during driving.

13. Case Pile Wave Analysis Program (CAPWAP) evaluation of a selected PDA record at the end of installation and the beginning of restrike. CAPWAP analysis shall include: graph showing the bearing capacity versus blow count and pile stress versus blow count; Simulated static load test curves for the tip and the top of the pile; evaluation of the soil parameters based on the matching of the measured and computed values of forces, velocities and displacements, and; static resistance distribution along the length of the pile.

B. Record for the vibration monitoring includes minimum:

1. Pile information and installation record.

2. The proposed locations of vibration sensors.

3. Recorded peak particle velocity (PPV) from various vibration sensors throughout the installation of the test pile.

3.5 TEST RECORD DOCUMENTS

A. Make available to Owner's Representative at site:

1. List of piles to be tested.
2. Updated versions of documentation required for testing.
3. Certifications of calibration.
4. Testing record data.

3.6 TEST PILE PREPARATION

Mark each PDA test pile at 1 foot intervals and number marks consecutively starting at pile tip for the purpose of recording penetration resistance and depth of pile penetration. Make marks and numbering clearly visible for monitoring personnel. Upon request, perform additional marks at 1 inch intervals for selected feet.

3.7 PILE SPLICES

Field splicing of test piles is not permitted, unless approved otherwise by the Owner' Representative.

3.8 TEST PILE INSTALLATION

A. Maintain pile orientation during driving where pile orientation is essential:

1. Keep hammer concentric with driving train in axial alignment on pile.

2. Do not use hammer to limit deviation of pile alignment during driving by exerting lateral forces or striking at an angle.

3. If damage to pile butt occurs whereby the hammer may not strike pile uniformly and axially, provide a fresh cut at the butt and check pile for proper fit.

B. Provide a stable and suitable means or device to indicate penetration of the test piles, visible to the Owner's Representative and at a safe distance from pile driver.

C. If requested by the Owner's Representative, throttle back hammer to operate at a reduced energy level as needed to protect test piles at initial stage of impact driving to avoid potential for high tension stresses in the pile.

3.9 TOLERANCES

A. The top of test piles shall not vary from the design horizontal alignment by more than two inches.

B. No single pile shall vary from the design alignment of its design horizontal axis by more than 3.0 degrees or one inch in 18 inches.

C. Centroid of pile at cutoff elevation shall not vary from design position shown by more than 3 inches after driving.

3.10 PILE CUTOFF

After the completion of the testing, upon the Owner's Representative's approval, cut at required elevation with tools that will not damage area below cut surface.

3.11 DAMAGED, MISPLACED, OR OTHERWISE REJECTED PILES

A. Test piles found damaged, necked, or otherwise unfit for use that are located at production pile locations shall be replaced.

B. Remove from site and replace with conforming piles.

C. The Owner's Representative reserves the right to request PDA testing of production piles, suspected of pile damage, to evaluate the pile integrity through the BTA and LTD PDA measurements.

-- End of Section --

SECTION 31 20 00.00

EARTH MOVING
11/08

PART 1 GENERAL

Subject to the General and Supplementary Conditions, this section includes the supply of all labor, equipment, materials, and incidentals for earth moving activities including but not limited to preparing subgrades for slabs-on-grade and pavement; excavating and backfilling for bulkhead walls and associated anchor walls; and excavating and backfilling for retaining walls and miscellaneous site features.

1.1 REFERENCES

The publications listed below form a part of this specification to the extent referenced. The publications are referred to within the text by the basic designation only.

ASTM INTERNATIONAL (ASTM)

ASTM D2487	(2017) Standard Practice for Classification of Soils for Engineering Purposes (Unified Soil Classification System)
ASTM D448	(2012; R 2017) Standard Classification for Sizes of Aggregate for Road and Bridge Construction
ASTM D698	(2012; E 2014; E 2015) Laboratory Compaction Characteristics of Soil Using Standard Effort (12,400 ft-lbf/cu. ft. (600 kN-m/cu. m.))
ASTM C138/C138M	(2017a) Standard Test Method for Density (Unit Weight), Yield, and Air Content (Gravimetric) of Concrete
ASTM C150/C150M	(2018) Standard Specification for Portland Cement
ASTM C260/C260M	(2010a; R 2016) Standard Specification for Air-Entraining Admixtures for Concrete
ASTM C33/C33M	(2018) Standard Specification for Concrete Aggregates
ASTM C495/C495M	(2012) Standard Test Method for Compressive Strength of Lightweight Insulating Concrete
ASTM C618	(2019) Standard Specification for Coal Fly Ash and Raw or Calcined Natural Pozzolan for Use in Concrete

ASTM C94/C94M	(2018) Standard Specification for Ready-Mixed Concrete
ASTM D1556/D1556M	(2015; E 2016) Standard Test Method for Density and Unit Weight of Soil in Place by Sand-Cone Method
ASTM D2167	(2015) Density and Unit Weight of Soil in Place by the Rubber Balloon Method
ASTM D2937	(2017; E 2017; E 2018) Standard Test Method for Density of Soil in Place by the Drive-Cylinder Method
ASTM D6938	(2017a) Standard Test Method for In-Place Density and Water Content of Soil and Soil-Aggregate by Nuclear Methods (Shallow Depth)
ASTM D2940/D2940M	(2020) Standard Specification for Graded Aggregate Material Bases or Subbases for Highways or Airports
ASTM E329	(2018) Standard Specification for Agencies Engaged in Construction Inspection, Testing, or Special Inspection
ASTM D3740	(2012a) Minimum Requirements for Agencies Engaged in the Testing and/or Inspection of Soil and Rock as Used in Engineering Design and Construction

AMERICAN ASSOCIATION OF STATE HIGHWAY AND TRANSPORTATION OFFICIALS (AASHTO)

AASHTO M 145	(1991; R 2012) Standard Specification for Classification of Soils and Soil-Aggregate Mixtures for Highway Construction Purposes

1.2 SUBMITTALS

Contractor shall provide submittals in conformance with the requirements of the General and Supplementary Conditions, and in accordance with Section 01 33 23 SUBMITTAL PROCEDURES. Submit the following:

SD-05 Design Data

Controlled Low-Strength Material Mix Design

SD-06 Test Reports

Fill

Drainage Course

Satisfactory Soils

Sand

Impervious Fill

Select Fill

Controlled Low-Strength Material

Compaction

SD-07 Certificates

Geotechnical Testing Agency Qualifications

Special Inspector Qualifications

Special Inspector

1.3 QUALITY CONTROL

1.3.1 Geotechnical Testing Agency Qualifications

Qualifications shall be in accordance with ASTM E329 and ASTM D3740 for testing indicated.

1.3.2 Special Inspector Qualifications

Qualifications shall be in accordance with ASTM E329 and ASTM D3740 for testing indicated.

1.4 FIELD CONDITIONS

Traffic: Minimize interference with adjoining roads, streets, walks, and other adjacent occupied or used facilities during earth-moving operations.

Do not close or obstruct streets, walks, or other adjacent occupied or used facilities without permission from Owner and authorities having jurisdiction.

Provide alternate routes around closed or obstructed traffic ways if required by Owner or authorities having jurisdiction.

Improvements on Adjoining Property: Authority for performing earth moving indicated on property adjoining Owner's property will be obtained by Owner before award of Contract.

1.5 RELATED SECTIONS

Drawings and general provisions of the Contract, including General and Supplementary Conditions and other Division 01 Specification Sections, apply to this Section. Other technical specification sections that may relate to this section, include but are not limited to the following:

A. Section 31 23 13.00 - EXCAVATION AND GRADING
A. Section 32 95 10.00 - PAVEMENT
A. Section 03 30 00 - CAST-IN-PLACE CONCRETE

1.6 DEFINITIONS

A. Borrow Soil: Satisfactory soil imported from off-site for use as

fill or backfill.

B. Drainage Course: Aggregate layer supporting the slab-on-grade that also minimizes upward capillary flow of pore water.

C. Excavation: Consists of the required below-grade removal and proper utilization or disposal of every description and of whatever substances encountered within the grading limits of the project. Excavation shall be performed to the lines and grades indicated on the drawings.

D. Fill, or Normal-weight Fill: Soil materials used for backfill or to raise existing grades beyond limits other than fill used for construction of the geo-grid mat load transfer platform as indicated on the drawings.

E. Structures: Bulkhead and anchor wall systems, retaining walls, slabs, pavement, and miscellaneous civil site features.

1.7 MEASUREMENT AND PAYMENT

No separate payment shall be made for Work under this specification. Payment for Work associated with this specification shall be included in the overall Lump Sum project cost.

PART 2 PRODUCTS

2.1 SOIL MATERIALS

2.1.1 Satisfactory Soils

Soil Classification Groups CL, ML, GW, GP, GM, SW, SP, SC, and SM according to ASTM D 2487 Groups A-1, A-2-4, A-2-5, and A-3 according to AASHTO M 145, or a combination of these groups; free of rock or gravel larger than 3 inches in any dimension, debris, waste, frozen materials, vegetation, and other deleterious matter. Plasticity Index shall be less than 4.

2.1.2 Unsatisfactory Soils

Soil Classification Groups GC, ~~SC, CL, ML,~~ OL, CH, MH, OH, and PT according to ASTM D2487 Groups A-2-6, A-2-7, A-4, A-5, A-6, and A-7 according to AASHTO M 145, or a combination of these groups. Unsatisfactory soils also include satisfactory soils not maintained within 2 percent of optimum moisture content at time of compaction.

2.1.3 Pavement Aggregate Flexible Base Course

Refer to Section 32 95 10.00 PAVEMENT.

2.1.4 Fill (Normal Weight Fill)

Naturally or artificially graded mixture of natural or crushed gravel, crushed stone, and natural or crushed sand; ASTM D2940/D2940M; with at least 90 percent passing a 1-1/2-inch sieve and not more than 12 percent passing a No. 200 sieve.

2.1.5 Drainage Course

Narrowly graded mixture of washed crushed stone, or crushed or uncrushed

gravel; ASTM D448; coarse-aggregate grading Size 57; with 100 percent passing a 1-1/2-inch sieve and zero to 5 percent passing a No. 8 sieve.

2.1.6 Sand

Fine aggregate in accordance with ASTM C33/C33M.

2.1.7 Impervious Fill

Clayey gravel and sand mixture capable of compacting to a dense state.

2.1.8 Select Fill

Select fill shall meet the following gradation requirements:

Size	%Passing
200 mm (4 in.)	100
4.75 mm (No. 4)	15-70
0.425 mm (No. 40)	10-60
0.075 mm (No. 200)	5-15

Select fill material passing the No. 40 sieve shall have a liquid limit less than 40 and a plasticity index less than 20.

2.2 CONTROLLED LOW-STRENGTH MATERIAL

A. Controlled Low-Strength Material: Self-compacting, low-density, flowable produced from the following:

1. Portland Cement: ASTM C150/C150M, Type II.
2. Fly Ash: ASTM C618, Class C or F.
3. Normal-Weight Aggregate: ASTM C33/C33M, 3/4-inch nominal maximum aggregate size.
4. Water: ASTM C94/C94M.
5. Air-Entraining Admixture: ASTM C260/C260M.

B. Produce low-density, controlled low-strength material with the following physical properties. Submit Controlled Low-Strength Material mix design for approval:

1. As-Cast Unit Weight: 36 to 42 lb/cu. ft. at point of placement, when tested according to ASTM C138/C138M.
2. Compressive Strength: 80 psi when tested according to ASTM C495/C495M.

C. Produce conventional-weight, controlled low-strength material with 140-psi compressive strength when tested according to ASTM C495/C495M.

PART 3 EXECUTION

3.1 PREPARATION

A. Protect structures, utilities, sidewalks, pavements, and other facilities from damage caused by settlement, lateral movement, undermining, washout, and other hazards created by earth-moving operations.

B. Protect and maintain erosion and sedimentation controls during earth-moving operations.

C. Protect subgrades and foundation soils from freezing temperatures and frost. Remove temporary protection before placing subsequent materials.

3.2 DEWATERING

A. Prevent surface water and ground water from entering excavations, from ponding on prepared subgrades, and from flooding Project site and surrounding area.

B. Protect subgrades from softening, undermining, washout, and damage by rain or water accumulation. Reroute surface water runoff away from excavated areas. Do not allow water to accumulate in excavations. Do not use excavated trenches as temporary drainage ditches.

3.3 GENERAL EXCAVATION

Unclassified Excavation: Excavate to subgrade elevations regardless of the character of surface and subsurface conditions encountered. Unclassified excavated materials may include rock, soil materials, and obstructions. No changes in the Contract Sum or the Contract Time will be authorized for rock excavation or removal of obstructions.

If excavated materials intended for fill and backfill include unsatisfactory soil materials and rock, replace with satisfactory soil materials.

3.4 EXCAVATION FOR STRUCTURES

Excavate to indicated elevations and dimensions within a tolerance of plus or minus 1 inch. If applicable, extend excavations a sufficient distance from structures for placing and removing concrete formwork, for installing services and other construction, and for inspections.

Excavations for Footings and Foundations: Do not disturb bottom of excavation. Excavate by hand to final grade just before placing concrete reinforcement. Trim bottoms to required lines and grades to leave solid base to receive other work.

3.5 SUBGRADE INSPECTION

A. Notify the Owner's Representative when excavations have reached required subgrade.

B. If the Owner's Representative determines that unsatisfactory soil is present, continue excavation and replace with compacted backfill or fill material as directed.

C. Proof-roll subgrade with a pneumatic-tired loaded dump truck weighing not less than 15 tons (13.6 tonnes) to identify soft pockets and areas of excess yielding. Do not proof-roll wet or saturated subgrades.

1. Completely proof-roll subgrade in one direction repeating proof-rolling in direction perpendicular to first direction. Limit vehicle speed to 3 mph.

2. Excavate soft spots, unsatisfactory soils, and areas of

excessive pumping or rutting, as determined by the Owner's Representative, and replace with compacted backfill or stabilize and fill as directed.

D. Authorized additional excavation and replacement material will be paid for according to Contract provisions.

E. Reconstruct subgrades damaged by freezing temperatures, frost, rain, accumulated water, or construction activities, as directed by the Owner's Representative, without additional compensation.

3.6 UNAUTHORIZED EXCAVATION

Fill unauthorized excavation under foundations or wall footings by extending bottom elevation of concrete foundation or footing to excavation bottom, without altering top elevation. Lean concrete fill, with 28-day compressive strength of 2000 psi, may be used when approved by the Owner's Representative.

Fill unauthorized excavations under other construction, pipe, or conduit as directed by the Owner's Representative.

3.7 STORAGE OF SOIL MATERIALS

Stockpile borrow soil materials and excavated satisfactory soil materials without intermixing. Place, grade, and shape stockpiles to drain surface water. Cover to prevent windblown dust..

Stockpile soil materials away from edge of excavations. Do not store within drip line of remaining trees. Do not store within 20 feet of the fuel line, culvert pipes, or other structures.

3.8 BACKFILL

Place and compact backfill in excavations promptly, but not before completing the following:

A. Construction below finish grade including, where applicable, subdrainage, dampproofing, waterproofing, and perimeter insulation.
B. Surveying locations of underground utilities for Record Documents.
C. Testing and inspecting underground utilities.
D. Removing concrete formwork.
E. Removing trash and debris.
F. Removing temporary shoring, bracing, and sheeting.
G. Installing permanent or temporary horizontal bracing on horizontally supported walls

Place backfill on subgrades free of mud, frost, snow, or ice.

3.9 FILL

A. Plow, scarify, bench, or break up sloped surfaces steeper than 1 vertical to 4 horizontal so fill material will bond with existing material.

B. Place and compact fill material in layers to required elevations as follows:

1. Under steps and landings, use fill.

2. Under footings and foundations, use fill.

C. Place fill on subgrades free of mud, frost, snow, or ice.

3.10 SOIL MOISTURE CONTROL

Uniformly moisten or aerate subgrade and each subsequent fill or backfill soil layer before compaction to within 2 percent of optimum moisture content.

A. Do not place backfill or fill soil material on surfaces that are muddy, frozen, or contain frost or ice.

B. Remove and replace, or scarify and air dry, otherwise satisfactory soil material that exceeds optimum moisture content by 2 percent and is too wet to compact to specified dry unit weight.

3.11 COMPACTION OF SOIL BACKFILLS AND FILLS

A. Place backfill and fill soil materials in layers not more than 8 inches in loose depth for material compacted by heavy compaction equipment and not more than 4 inches in loose depth for material compacted by hand-operated tampers.

B. Place backfill and fill soil materials evenly on all sides of structures to required elevations and uniformly along the full length of each structure.

C. Compact soil materials to not less than the following percentages of maximum dry unit weight according to ASTM D698:

1. Under structures, building slabs, steps, and pavements, scarify and recompact top 12 inches of existing subgrade and each layer of backfill or fill soil material at 95 percent.

2. Compact pavement aggregate flexible base at 100 percent.

D. Place backfill behind combi-wall, including fill required to raise the grade in this area, in dewatered conditions so sufficient compaction can be completed. Alternatively, in lieu of backfill material which requires dewatering, well-graded granular material may be placed hydraulically in underwater conditions. granular material shall be suitable for underwater placement and consist of sand (SP, SW), gravel (GP, GW), or crushed rock materials with less than 10-percent by weight passing the No. 200 Sieve, and containing no Clay. Selection of the granular material must be coordinated with the Rigid Inclusion contractor and approved by the RI contractor and the Owner's Representative. Granular material placed below the water levels must be vibro-compacted. The vibro-compaction densification program should achieve a minimum relative density of 65-percent of the entire fill mass, or a minimum SPT N-value of 15 blows per foot within the fill mass. Contractor shall submit material and placement plan for underwater placement for approval.

3.12 FIELD QUALITY CONTROL

A. Special Inspections: The Contractor shall engage a qualified special inspector to perform the following special inspections:

1. Determine prior to placement of fill that site has been prepared in compliance with requirements.

2. Determine that fill material classification and maximum lift thickness comply with requirements.

3. Determine, during placement and compaction that in-place density of compacted fill complies with requirements.

B. Testing Agency: Contractor will engage a qualified geotechnical testing agency or to perform tests and inspections. Refer to Section 01 45 00.00, Testing Laboratory Services, for additional requirements of the testing agency.

C. Allow testing agency to inspect and test subgrades and each fill, or backfill layer. Proceed with subsequent earth moving only after test results for previously completed work comply with requirements.

D. Testing agency will test compaction of soils in place according to ASTM D1556/D1556M, ASTM D2167, ASTM D2937, and ASTM D6938, as applicable. Tests will be performed at the following locations and frequencies:

1. Slab and Pavement Areas: At subgrade and at each compacted fill and backfill layer, at least one test for every 2000 sq. ft. or less of paved area or slab but in no case fewer than three tests.

2. Bulkhead and Anchor Wall Backfill: At each compacted backfill layer, at least one test for every 100 feet or less of wall length but no fewer than two tests.

E. Retaining Wall Subgrade: At retaining wall subgrades, where applicable, at least one test of each soil stratum will be performed to verify design bearing capacities. Subsequent verification and approval of other footing subgrades may be based on a visual comparison of subgrade with tested subgrade when approved by the testing agency.

F. When testing agency reports that subgrades, fills, or backfills have not achieved degree of compaction specified, scarify and moisten or aerate, or remove and replace soil materials to depth required; recompact and retest until specified compaction is obtained.

3.13 PROTECTION

A. Protecting Graded Areas: Protect newly graded areas from traffic, freezing, and erosion. Keep free of trash and debris.

B. Repair and reestablish grades to specified tolerances where completed or partially completed surfaces become eroded, rutted, settled, or where they lose compaction due to subsequent construction operations or weather conditions.

1. Scarify or remove and replace soil material to depth as directed by the Owner's Representative; reshape and recompact.

C. Where settling occurs before Project correction period elapses, remove finished surfacing, backfill with additional soil material, compact, and reconstruct surfacing.

1. Restore appearance, quality, and condition of finished surfacing to match adjacent work, and eliminate evidence of restoration to greatest extent possible.

3.14 DISPOSAL OF SURPLUS AND WASTE MATERIALS

A. Remove surplus satisfactory soil and waste materials, including unsatisfactory soil, trash, and debris, and legally dispose of them off Owner's property.

B. Transport surplus satisfactory soil to designated storage areas on Owner's property. Stockpile or spread soil as directed by the Owner's Representative.

1. Remove waste materials, including unsatisfactory soil, trash, and debris, and legally dispose of them off Owner's property.

-- End of Section --

SECTION 31 23 13.00

EXCAVATION AND GRADING
11/08

PART 1 GENERAL

Subject to the General and Supplementary Conditions, this section includes the supply of all labor, equipment, materials, and incidentals for excavation and grading. Section includes but is not limited to the excavation of materials on site; excavation of borrow material as needed; compaction of natural subgrades; placement and compaction of embankments to grade; finish grading; stripping, stockpile and placement of topsoil; disposal of excess or unsuitable materials; and other required operations.

1.1 REFERENCES

The publications listed below form a part of this specification to the extent referenced. The publications are referred to within the text by the basic designation only.

ASTM INTERNATIONAL (ASTM)

ASTM D698	(2012; E 2014; E 2015) Laboratory Compaction Characteristics of Soil Using Standard Effort (12,400 ft-lbf/cu. ft. (600 kN-m/cu. m.))
ASTM D1556/D1556M	(2015; E 2016) Standard Test Method for Density and Unit Weight of Soil in Place by Sand-Cone Method
ASTM D6938	(2017a) Standard Test Method for In-Place Density and Water Content of Soil and Soil-Aggregate by Nuclear Methods (Shallow Depth)

1.2 SUBMITTALS

Contractor shall provide submittals in conformance with the requirements of the General and Supplementary Conditions, and in accordance with Section 01 33 00 SUBMITTAL PROCEDURES. Submit the following:

SD-06 Test Reports

Granular Fill

Topsoil

Compaction

SD-07 Certificates

Geotechnical Testing Agency Qualifications

1.3 RELATED SECTIONS

Drawings and general provisions of the Contract, including General and Supplementary Conditions and other Division 01 Specification Sections, apply to this Section. Other technical specification sections that may relate to this section, include but are not limited to the following:

A. Section 31 20 00.00 - EARTH MOVING
A. Section 32 92 13.01 - HYDROMULCHING

1.4 QUALITY CONTROL

1.4.1 Geotechnical Testing Agency Qualifications

Qualifications shall be in accordance with ASTM E329 and ASTM D3740 for testing indicated.

1.5 FIELD CONDITIONS

Traffic: Minimize interference with adjoining roads, streets, walks, and other adjacent occupied or used facilities during earth-moving operations.

Do not close or obstruct streets, walks, or other adjacent occupied or used facilities without permission from Owner and authorities having jurisdiction.

Provide alternate routes around closed or obstructed traffic ways if required by Owner or authorities having jurisdiction.

Improvements on Adjoining Property: Authority for performing earth moving indicated on property adjoining Owner's property will be obtained by Owner before award of Contract.Text

1.6 RELATED SECTIONS

Drawings and general provisions of the Contract, including General and Supplementary Conditions and other Division 01 Specification Sections, apply to this Section.

1.7 DEFINITIONS

A. Borrow Soil: Satisfactory soil imported from off-site for use as fill or backfill.

B. Embankment: Earth fill placed and compacted in successive layers to the line and grade defined by the construction plans..

C. Excavation: Consists of the required below-grade removal and proper utilization or disposal of every description and of whatever substances encountered within the grading limits of the project. Excavation shall be performed to the lines and grades indicated on the drawings.

D. Fill, or Normal-weight Fill: Soil materials used for backfill or to raise existing grades beyond limits other than granular fill used for construction of the geo-grid mat load transfer platform as indicated on the drawings.

E. Structures: Bulkhead and anchor wall systems, retaining walls, slabs, pavement, and miscellaneous civil site features.

F. Compaction: Compaction of soil materials consists of rolling, sprinkling, tamping and otherwise working the soil to achieve a percent of Standard Proctor density as determined by the AASHTO Standard T 99 procedure.

G. Finished Grading: Operations required for smoothing disturbed areas that are not overlaid with pavement or other structures. Finish grading consists of the final operations for bringing site grade to lines and grades shown on drawings.

H. Stripping of Ground Surface: Stripping consists of removing all vegetation, decayed vegetable matter, rubbish and other unsuitable materials located within the areas designated for grading operations. Unless otherwise designated to remain, all areas shall be stripped to ground level prior to beginning earthwork.

I. Subgrade: Consists of that portion of the surface on which a compacted embankment or pavement is constructed.

J. Topsoil: Consists of that portion of the surface on which a compacted embankment or pavement is constructed.

K. Waste: Excavated material which is unsuitable for reuse on site or which is in excess of the materials needed for embankment operations. All waste material becomes property of the Contractor and shall be legally disposed of in accordance with Section 01 74 19.00 - Waste Material Disposal.

L. Granular Fill: Granular fill used for construction of the load transfer platform.

1.8 MEASUREMENT AND PAYMENT

No separate payment shall be made for Work under this specification. Payment for Work associated with this specification shall be included in the overall Lump Sum project cost.

PART 2 PRODUCTS

2.1 SOIL MATERIALS

2.1.1 Fill (Normal Weight Fill)

See Section 31 20 00.00 EARTH MOVING.

2.1.2 Granular Fill

A. Consist of crushed stone ~~or sand~~ with a maximum particle size of 4 inches
B. No more than 1~~2~~0 percent passing the No. ~~200~~8 sieve
C. The material shall consist of sound particles, which are angular and not rounded
D. Numerous gradations will be applicable, however the material should be well graded and have sufficient fines to fill voids between larger particles, approved by the Owner's Representative.

2.1.3 Topsoil

1. Topsoil material that will be required for finish grading operations shall conform to the requirements included within this Section and Section 32 92 13.01 Hydromulching.

2. Obtain topsoil from site or provide natural fertile, friable loam suitable for growths of grass and plants.

3. Topsoil shall contain decomposed vegetable matter, finely divided and minimum 4 percent by weight.

4. Topsoil shall be free from subsoil, clay, brush, weeds, rocks and dirt clods larger than 1 inch in diameter, stalks, roots and materials which would be toxic or harmful to growth.

5. Acidity/Alkalinity: pH 6.0 to pH 7.5.

6. Grading analysis:
   a. 2" sieve, 100% minimum passing; Number 4 sieve, 90% minimum passing; Number 10 sieve, 80%minimum passing

   (i) Sand 20 to 75 percent
   (ii) Silt 10 to 60 percent
   (iii) Clay 5 to 30 percent

7. All topsoil shall be free from all herbicides and insecticides which might adversely affect subsequent growth of grasses or plantings or which might otherwise contain materials toxic to humans and pets.

8. It shall be the Contractor's responsibility to verify that all topsoil conforms to these specifications.

9. Soil Analysis: The Contractor shall obtain an agricultural soil analysis of topsoil taken from three areas of the site. These samples shall be submitted to an accredited and approved soils laboratory at Contractor's cost. Submit results of soil analysis to the Owner for review. The soil analysis shall include recommendations for amendments to the soil to produce optimum plant growth from the variety of plants and grasses proposed. These amendments shall be made at the Contractor's expense and shall be included in the proposal.

2.2 EQUIPMENT

Contractor shall furnish, operate and maintain appropriate equipment necessary to achieve uniform layers, sections and smoothness in grade and to meet specified compaction densities. Obtain approval for equipment and materials before commencing embankment work.

PART 3 EXECUTION

3.1 VERIFICATION OF CONDITIONS

Contractor shall inform and satisfy himself as to the character, quantity and distribution of material to be excavated. A geotechnical report will be available from the Owner.

3.2 PROTECTION OF EXISTING STRUCTURES

The Contractor will be held responsible for any damage to manholes, inlets, valves, pipes, or other facilities, caused by him in making the necessary excavation and fills. The Contractor shall repair all such damage at his expense.

3.3 WORKMANSHIP

Work shall be performed by personnel trained and experienced in this work and shall be done under the direction of a superintendent on Contractor's staff.

3.4 USE AND MAINTENANCE OF ROADS

A. The Contractor shall conduct grading and hauling operations in an orderly and safe manner, and shall protect the traveling public, the operations of the Owner and the operations of other contractors. The Contractor's hauling equipment operating on public roads and streets shall comply with the load limit, speed limit, and other applicable regulations of the City, County and State. On the property of the Owner, the Contractor's hauling operations shall not interfere with the normal operations of the Owner's port facilities or with truck and rail traffic to and from such facilities.

B. The Contractor shall maintain dirt surfaced haul roads used by him and leave them in a condition acceptable to the Owner's Representative upon completion of their use. Flexible base surface, pavement areas and roads used by the Contractor shall be repaired by the Contractor at his expense wherever damaged by his operations, and he shall restore such flexible base surfaces, roads and pavement areas to the condition existing prior to such damage.

C. In the event fences must be crossed by the Contractor, such fences shall be opened only as directed by the Owner's Representative and be kept closed between passage of traffic except as permitted by the Owner's Representative.

D. Upon completion of the work, the fences shall be repaired to their condition existing prior to the beginning of the Contractor's work.

E. The Contractor shall prevent spillage of earth fill and other materials being hauled. Where material is spilled on public roads or streets, or on the Owner's surfaced and paved roads, the Contractor shall promptly remove such material so as to maintain such roads and streets in a reasonably clean condition.

3.5 SCARIFYING, CLEARING AND GRUBBING

A. The Contractor shall remove and dispose of all trees, stumps, brush, roots, logs and other vegetation and all debris from within all of the sites that are to be excavated, filled or graded, and as shown on the drawings. The Contractor shall remove all grass and roots of shrubs to a depth of at least 6 inches and grub out tree roots larger than 2 inches in diameter to a depth of at least 18 inches. Topsoil stripping of the surface soil possessing the characteristic which would produce and sustain grass and other vegetative growth shall be removed. Remove and dispose of all products resulting from stripping of the site. Do not allow material to accumulate at locations in or

about the work areas.

B. All trash and debris such as stones, brick, broken concrete, lumber, scrap metal, paper, and other refuse larger than 4 inches in diameter shall be removed.

C. All cleared and grubbed material shall become the property of the Contractor, to be disposed of off the Owner's property.

3.6 EXCAVATION

A. Excavation is defined as the removal of earth, loose rock, gravel, shell, and, except those materials to be removed under Section 3.5, SCARIFYING, CLEARING AND GRUBBING, above, any other materials encountered in securing the proper subgrade in each area as shown on the Drawings. Excavation shall include the removal of unsuitable materials from the subgrade or existing ground to receive fill as required by these Specifications or as directed by the Owner's Representative and the excavation of drainage ditches, side slopes of cuts, and shoulder areas adjoining subgrades for pavements and railroads.

B. All acceptable excavated materials shall be used in making fills and backfills, as required, within the limits of the project, but outside of the backland pavement area.

C. The Contractor shall remove from pavement and subgrades, from all other areas to be graded, and from areas to receive fill, all muck and spongy or unstable materials which will not consolidate to a depth to be determined by the Owner's Representative and refill the space with acceptable material. Backfill material shall be placed in accordance with the requirements for compacted embankment. Unsatisfactory and/or excess materials shall be considered waste materials and shall be disposed of.

D. If the Contractor for any reason fails to use diligent care in excavating and preparing rough grade for compaction and there is a deficiency of earth after compacting of finish subgrade surfaces, then he shall fill such low areas and recompact as directed by the Owner's Representative without extra compensation.

E. Excavations shall be made to the cross sections, lines and elevations shown on the Drawings.

F. If it is not possible to place material in the proper section of permanent construction at the time of excavation, stockpile the material in approved areas for later use. Stockpiled materials should be protected from dumping of unwanted materials and dumping by the public

G. In undercut areas, the volume of unstable soil below the top of subgrade shall be measured by "before" and "after" cross sections and the quantity determined by the method of average end areas. The removal of unstable soil and the backfilling with suitable soil of such undercut areas shall be paid for per cubic yard.

H. Blasting: Use of explosives for excavation operations should not be necessary and will not be permitted.

I. Drainage: During excavation, maintain grades for complete drainage. As necessary, install temporary drains or drainage swales to intercept or divert overland flow from excavated areas.

J. Existing Utilities: Contractor shall field verify locations of existing utilities, including the underground fuel line, prior to extensive excavation operations. While it is the intent of the construction plans to show the known locations and sizes of existing utilities, the Owner's Representative retains no responsibility for lines not shown on construction plans or known to the Contractor prior to excavation. Contractor shall protect existing utilities from damage during excavation. Any damage to existing utilities shall be reported immediately and shall be satisfactorily repaired at the Contractor's expense.

K. Pipelines: Contractor shall suspend machine excavation within 5 feet of any pipeline right-of-way until a company representative is present to identify pipe location and to direct further excavation operations. Notification of Pipeline Company of Contractor's operations and request for attendance of a representative will be Contractor's responsibility. Contractor shall resume suspended operations only under supervision of pipeline company representative and employ only such excavation methods, means, equipment and safety measures as approved by representative. Contractor shall do no work on pipeline as part of this contract, such as lowering, cribbing up, construction of bents, repairs to coating, cutting, welding, making repairs or other essential work, all of which will be done by Pipeline Company and at their own expense. Contractor shall be solely responsible to Pipeline Company for any damages to their line and any related construction as a result of Contractor's operations, irrespective of any order, directive or approval by company representative, or of his presence on the work. The Contractor will not be reimbursed directly for any extra work or expenditure as a result of intersecting any pipeline installation.

3.7 EXTRA EXCAVATION

Upon completion of excavation to the lines and grades given on the construction plans, areas identified as having weak or poor soil characteristics shall require extra excavation at Contractor's expense. Contractor shall remove soft or undesirable materials to a depth of 18 inches and backfill areas with stable fill material. Fill material shall comply with requirements for embankment fill and shall be compacted to specified density per Compaction paragraphs within this section.

3.8 TREATMENT OF NATURAL SUBGRADE UNDER EMBANKMENTS

A. After clearing and grubbing and excavation to lines under proposed embankments, proof roll and remove soft or undesirable material to a depth of 18 inches. Break down sides of holes or depressions to flatten the slopes.

B. Fill each depression with the soil appropriate for the materials to be placed on the subgrade. Place the fill in layers moistened and compacted as specified in this section.

C. After depressions have been filled and immediately before placement of compacted fill in a section of the embankment, thoroughly scarify the foundation material to a depth of 6 inches. Remove roots

and debris turned up while loosening the soil.

D. Compact the surface of the embankment subgrade as specified in this section.

E. Take care to prepare the embankment so that planes of seepage or weakness are not induced. Should the Owner's Representative suspect such a deficiency, the material must be thoroughly broken and recomputed before proceeding with construction.

3.9 EMBANKMENT AND FILL

A. Inspection of Subgrade: Do not place fill on any part of the embankment subgrade until the subgrade preparation has been inspected by the Owner.

B. Spreading Fill: After dumping material, break up and spread fill material. During dumping and spreading process, remove all roots, stones and debris that are uncovered in the embankment material. Construct embankments in successive horizontal layers, extending across the entire fill area. Each layer of fill (8 inches maximum for embankment and loose lifts between 6-8 inches for fill) shall be uniform as to material and moisture content before compaction. Individual lifts shall be scarified after compaction to prevent development of laminations between lifts. As soon as possible after placement begins, crown the surface to drain freely and maintain such conditions throughout construction.

C. Benching: When fill is to be made and compacted against hillsides and/or existing fill, the slopes of original hillside and/or fill shall be horizontally benched to key the fill material to the underlying ground. A minimum of 6 inches normal to the original slope shall be scarified and recomputed, as the fill is brought up in layers, to ensure that the new work is constructed on firm subgrade. This subsection applies to existing slopes having a gradient steeper than 4:1.

D. Backfill Behind Curbs: The space behind curbs or roadway pavements, except areas to be paved, shall be backfilled with selected material and compacted with truck traffic or by other means acceptable to the Owner's Representative. The first layer of backfill may be of sufficient depth to permit the use of truck traffic for material compaction. Succeeding layers shall not exceed eight inches (8") in depth, loose measurement. Backfill shall be placed above the top of the curbs and finished to the roadway cross sections shown on the Drawings or, if not shown, to a rounded surface to provide drainage of the area behind the curbs.

3.10 COMPACTION OF NATURAL GROUND AND SUBGRADE

A. Compaction Requirements:

1. All natural ground and excavated areas above the water table which are to receive compacted embankment shall be compacted to a depth of eight (8) inches. In select areas and in areas below the water table the Contractor is allowed to "bridge" a soft spot, with a required compaction of 90% or more standard proctor density for the first lift. Beyond, Contractor is to install material in

accordance with the specification. Owner's Representative is to identify the location of any bridging. Upon completion of the installation of material to top of subgrade, Owner's Representative's testing lab shall test density (at Contractor's expense) of compacted, un-stabilized soil at location above bridging to determine if material is compacted as specified. Bridging of soft spots will not be permitted where top of subgrade will be less than 16 inches above original grade. All railroad subgrades shall be compacted to a depth of not less than eight (8") inches, for a width of not less than ten (10') feet on each side of the centerline of each track. All pavement subgrades shall be compacted likewise over the area of such pavement and its sub-base. Shoulders for roadway pavements and other areas, if designated to be compacted on the Drawings or in the Technical Specifications, shall be compacted likewise.

2. The top eight (8") inches of natural ground and cut sections to be compacted within the above limit shall be scarified, wetted or dried to produce optimum moisture content, and compacted to a density of not less than ninety-five (95%) percent of maximum laboratory dry density as determined in accordance with ASTM D698 (Standard Proctor compaction test). Compaction tests will be performed by Owner's Representative or by a commercial testing laboratory retained and paid for by the Contractor.

B. Compaction Equipment:

1. A self-propelled tamping roller or other type of roller meeting the approval of the Owner's Representative, the weight of which shall be compatible to the type of soil and depth of compaction, shall be used for the compactive effort. The projection of the feet of the tamping roller shall be equal to or greater than the depth of the layer to be compacted.

2. A powered mechanical, hand-held tamper of a type suitable for compacting soil, as approved by the Owner's Representative, shall be used in restricted space areas where roller and pneumatic tire compacting equipment cannot be operated.

3. Compaction equipment as specified in Section 31 23 13.00 - EXCAVATION AND GRADING for compacting fill, as approved by the Owner's Representative.

3.11 CONSTRUCTION OF COMPACTED FILLS AND BACKFILLS

A. The hauling, placing and compaction of excavated material for earth embankments, fills, granular fill, or backfills, shall be performed in accordance with the following requirements.

B. Soils acceptable for fill or backfill shall be free of organic matter such as roots and other vegetable matter subject to decay and any other material which would affect the stability of the fill. Foreign debris (wood, concrete, or other extraneous material) larger than 8 inches in diameter or 1 foot square is not allowed and is to be removed from backfill. Except as allowed by the Owner's Representative in writing, fill or backfill shall have the following characteristics when tested in accordance with standard ASTM procedures:

1. Plasticity Index: Between 15 and 30 (ASTM D4318)

2. Application of lime slurry to modify the soil properties shall meet the plasticity index requirement of item "1." above.

C. The Owner's Representative shall be the judge of the suitability or unsuitability of excavated materials for use in fills and backfills. Unsuitable materials shall be disposed of as provided under Section 3.14 MATERIAL DISPOSAL.

D. In the event that ground water is encountered, semi-compacted backfill shall be placed from the bottom of the excavation to one foot aboveground water elevation, or as directed by the Owner's Representative. Backfill shall be placed in maximum lifts of one foot each (loose measurement) and compacted by crawler tractor or other approved means to obtain the maximum practical density. Bottom of excavation will not require compaction in this event. See Specification Section 31 20 00.00 for additional requirements on material and placement of backfill and compaction adjacent to the combi-wall bulkhead where backfill below the water elevation is required.

E. All compacted fill, granular fill, or backfill called for under these specifications or as shown on the Drawings shall be placed from one foot above groundwater level, from the bottom of the excavation or from natural ground as the case may be. Each layer shall extend across an entire fill or backfill section. Each layer shall be wetted or dried to be no wetter than 3 percent (+3%) to no drier than 3 percent (-3%) from optimum moisture content, and compacted to a density of not less than ninety-five (95%) percent of maximum laboratory dry density as determined in accordance with ASTM D698 (Standard Proctor compaction test), except the top layer of the subgrade shall be compacted to one hundred (100%) percent of such maximum.

F. If the material to be compacted contains excessive or insufficient moisture to permit compaction in accordance with the above requirement, the Contractor shall manipulate the material to reduce moisture content or add water to increase moisture content to obtain the specified density. The Owner's Representative may test soil for moisture content before compaction, and in the event the soil has less than optimum moisture or is likely to lose enough moisture prior to completion of compaction to bring the moisture content below optimum, the Contractor shall add water and thoroughly mix the soil layer before compacting.

G. When necessary to key in the previous layer, the upper surface of each compacted layer of the fill or backfill and the upper surface of ground compacted in place shall be scarified to a depth of one inch (1") just prior to the placing of the succeeding layer of embankment thereon, to provide a blending and interlocking of the adjoining surfaces of the two layers. In areas where the previous compacted layer has compactor roller teeth indentations one-half inch (1/2") to one inch (1") deep and, in the opinion of the Owner's Representative, has good anchorage for the next layer, no scarification shall be necessary. The soil shall be placed in layers not greater than eight inches (8") in depth (compacted depth) after each preceding layer has been prepared as described hereinabove.

H. Equipment to be used for compaction of fills and backfills shall be the same as specified hereinbefore in Section 3.10 B, COMPACTION EQUIPMENT.

I. After the compaction of each layer of soil is completed, density tests will be performed by the ~~Owner~~Contractor's testing agency. If the material fails to meet the density specified, the course shall be reworked as necessary, at the expense of the Contractor, to obtain the specified density. Subject to the approval of the Owner's Representative, the Contractor may alter his compaction method on subsequent work to obtain the specified density.

J. For compacted strips left temporarily or overnight may be partially sealed by rolling with pneumatic tire roller to reduce the loss or gain of moisture.

3.12 DISTRIBUTION OF TOPSOIL

A. Preparation:

1. Prior to placing topsoil, scarify the subgrade to a depth of 2 inches to provide effective bonding of the topsoil with the subgrade. Use a chisel plow with the chisels sets 10 inches apart.

2. Shape all areas designated for grading, including cut and fill areas, to receive a minimum of 4 inches of topsoil.

3. In areas that require only blading and dressing, the adequacy of existing topsoil will be determined by the Owner.

B. Placement:

1. Do not haul or place wet topsoil. Do not place topsoil on subgrade that is excessively wet, extremely dry, or in a condition otherwise detrimental to proper grading or proposed planting.

2. Distribute topsoil uniformly and spread evenly to an average thickness of 4 inches. Do not compact topsoil. Correct irregularities in the surface to prevent formation of depressions where water could stand.

3. Perform the spreading operation so that planting can proceed with little additional tillage or soil preparation. Leave the area smooth, suitable for lawn planting.

C. Maintenance: Where any portion of the surface becomes eroded or otherwise damaged, repair the affected area to establish the condition and grade prior to topsoil placement; then replace topsoil.

3.13 FINAL GRADING

A. Compacted subgrades and the top surfaces of fills and backfills in areas to receive pavements or in other areas specified shall be sealed with a pneumatic roller and finished to a smooth surface with a grader blade to the line and grade required.

B. All grading shall conform to the location, size and elevations shown on the Drawings. Concrete slab and pavement subgrades shall be graded to the planned elevations so that the thickness of pavement base and pavement and track sub-ballast and ballast will not be less than that shown on the Drawings.

C. No equipment or hauling shall be permitted on finished subgrades

except by special permission of the Owner's Representative and then only where special protection is provided. Any damage caused to such portions of the subgrade by the operations of this Contractor shall be repaired by him at his own cost.

D. Should the subgrade, for any reason or cause, lose the required stability, density or finish before the pavement base or concrete is placed, the subgrade shall be recompacted and refinished at the expense of the Contractor. Excessive loss of moisture in the subgrade shall be prevented by sprinkling and/or sealing.

E. Sufficient subgrade shall be prepared in advance to ensure satisfactory prosecution of the work of placing pavement base or railroad sub-ballast.

F. After other work has been completed except for exactness of finish as required, slopes and ditches shall be smoothly shaped.

G. Ditches and channels shall be cleared of debris and obstructions.

H. Excess earth or other waste material adjacent to structures, poles, trees or other objects shall be leveled down or otherwise disposed of as required.

I. Loose stones, rocks and boulders within the Project site that would fail to pass a 2 inch ring shall be removed and disposed of as required.

J. Roots, trash and other debris shall be removed from Owner's controlled land and entire Project site placed in a neat and presentable condition.

K. Dragging, pushing or scraping of material along or across the surface of completed pavement will not be permitted.

L. Continuously maintain sections until acceptance of work.

M. The finished surface shall not more than 0.10 feet above or below established grade or cross section.

N. Finish ditches to drain readily.

O. The Contractor may use machinery acceptable to the Owner to complete most of the work to establishing finished grade.

3.14 MATERIAL DISPOSAL

A. Unless otherwise provided in these Technical Specifications, all unsuitable excavated materials and all excess unsuitable earthen materials, trash, and debris shall become the property of the Contractor and shall be removed from Owner's premises at the Contractor's expense.

B. Waste Material: Legally dispose of waste material as specified in Section 01 74 19.00, Waste Material Disposal, without causing expense or damage to the Owner. The Owner's waste disposal site may be used for prescribed waste material as indicated on the plans.

3.15 FIELD QUALITY CONTROL

A. Special Inspections: Refer to Section 31 23 13.00 EXCAVATION AND GRADING.

B. Testing Agency: Contractor will engage a qualified geotechnical testing agency or to perform tests and inspections. Refer to Section 01 45 00.00, Testing Laboratory Services, for additional requirements of the testing agency.

C. Allow testing agency to inspect and test subgrades and each fill, or backfill layer. Proceed with subsequent earth moving only after test results for previously completed work comply with requirements.

D. Testing Requirements: Prepare optimum moisture/density relationship for subgrade in accordance with ASTM D698. Test compacted general fill embankment and backfill as follows:

a. One field density test minimum for every 1000 cubic yards of material placed in compliance with ASTM D1556/D1556M or ASTM D6938.

b. Four random field density tests minimum of backfill at each culvert, abutment and similar locations in compliance with ASTM D1556/D1556M or ASTM D6938.

F. When testing agency reports that subgrades, fills, or backfills have not achieved degree of compaction specified, scarify and moisten or aerate, or remove and replace soil materials to depth required; recompact and retest until specified compaction is obtained.

-- End of Section --

SECTION 31 41 16

STEEL PILE BULKHEAD
08/09

PART 1 GENERAL

Subject to the General and Supplementary Conditions, this section includes the supply of all labor, equipment, materials, and incidentals for the combi-wall bulkhead system including the pipe and sheet pile bulkhead wall, pipe and sheet pile return wall, and sheet pile anchor wall.

1.1 REFERENCES

The publications listed below form a part of this specification to the extent referenced. The publications are referred to within the text by the basic designation only.

AMERICAN INSTITUTE OF STEEL CONSTRUCTION (AISC)

AISC 325	(2017) Steel Construction Manual
AISC 326	(2009) Detailing for Steel Construction

AMERICAN WELDING SOCIETY (AWS)

AWS A2.4	(2012) Standard Symbols for Welding, Brazing and Nondestructive Examination
AWS D1.1/D1.1M	(2015; Errata 1 2015; Errata 2 2016) Structural Welding Code - Steel

ASTM INTERNATIONAL (ASTM)

ASTM A252	(2010) Standard Specification for Welded and Seamless Steel Pipe Piles
ASTM A6/A6M	(2014) Standard Specification for General Requirements for Rolled Structural Steel Bars, Plates, Shapes, and Sheet Piling
ASTM A690/A690M	(2013a; R 2018) Standard Specification for High-Strength Low-Alloy Nickel, Copper, Phosphorus Steel H-Piles and Sheet Piling with Atmospheric Corrosion Resistance for Use in Marine Environments

1.2 SUBMITTALS

Contractor shall provide submittals in conformance with the requirements of the General and Supplementary Conditions, and in accordance with Section 01 33 00 SUBMITTAL PROCEDURES. Submit the following:

SD-01 Preconstruction Submittals

Installation Procedures

Order List

Quality Control Plan

SD-02 Shop Drawings

Fabrication Drawings

Steel Piling

SD-03 Product Data

Driving

Pile Driving Equipment

Pulling and Redriving

SD-06 Test Reports

Materials Tests

Wave Equation Analysis

Weld Inspection Reports

SD-07 Certificates

Material Certificates

Welding Procedures And Qualifications

Geotechnical Consultant Documentation

SD-11 Closeout Submittals

Pile Driving Record

1.3 RELATED SECTIONS

Drawings and general provisions of the Contract, including General and Supplementary Conditions and other Division 01 Specification Sections, apply to this Section. Other technical specification sections that may relate to this section, include but are not limited to the following:

A. Section 26 42 00.00 - SOIL SIDE IMPRESSED CURRENT CATHODIC PROTECTION SYSTEM SPECIFICATIONS
B. Section 26 42 00.01 - WATER SIDE IMPRESSED CURRENT CATHODIC PROTECTION SYSTEM SPECIFICATIONS
C. Section 09 97 13.00 20 - STEEL COATINGS
D. Section 05 12 00 - STRUCTURAL STEEL

1.4 QUALITY CONTROL

Submit a Quality Control Plan in accordance with section 01 40 00.00 QUALITY REQUIREMENTS. The plan shall include a written of the following Quality Control specifics, at a minimum:

QC Personnel

Preparation and coordination for install of bulkhead
Preparation and survey control and templates
Procedures for materials including delivery, handling and storage
Procedures for installation
Procedures for inspections, including coatings
Procedures for mitigation including obstructions encountered

1.4.1 Material Certificates

For each shipment, submit certificates identified with specific lots prior to installing piling. Include in the identification data piling type, dimensions, chemical composition, mechanical properties, section properties, heat number, and mill identification mark.

1.4.2 Fabrication Drawing Requirements

Submit fabrication drawings for approval prior to fabrication. Prepare in accordance with AISC 326 and AISC 325. Fabrication drawings must not be reproductions of contract drawings. Include complete information for the fabrication and erection of the structure's components, including the location, type, and size of bolts, welds, member sizes and lengths, connection details, blocks, copes, and cuts. Use AWS A2.4 standard welding symbols. Any deviations from the details shown on the contract drawings must be clearly highlighted on the fabrication drawings. Explain the reasons for any deviations from the contract drawings.

1.4.3 Welding Procedures and Qualifications

Prior to welding, submit certification for each welder stating the type of welding and positions qualified for, the code and procedure qualified under, date qualified, and the firm and individual certifying the qualification tests. If the qualification date of the welding operator is more than one-year old, the welding operator's qualification certificate must be accompanied by a current certificate by the welder attesting to the fact that he has been engaged in welding since the date of certification, with no break in welding service greater than 6 months.

Conform to all requirements specified in AWS D1.1/D1.1M.

1.4.4 Welding Inspections

1.4.4.1 Visual Inspection

AWS D1.1/D1.1M. Furnish the services of AWS-certified welding inspectors for fabrication and erection inspection and testing and verification inspections.

Inspect proper preparation, size, gaging location, and acceptability of welds; identification marking; operation and current characteristics of welding sets in use.

1.4.4.2 Nondestructive Testing

Nondestructive testing must be in accordance with AWS D1.1/D1.1M. Test locations must be as selected by the Owner's Representative. If more than 20 percent of welds made by a welder contain defects identified by testing, then all welds made by that welder must be tested by ultrasonic testing, as approved by the Owner's Representative. When all welds made by an individual welder are required to be tested, magnetic particle testing must

be used only in areas inaccessible to ultrasonic testing. Retest defective areas after repair. Submit weld inspection reports.

1.4.5 Geotechnical Consultant Documentation

The services of an independent, Registered Professional Geotechnical Engineer, experienced in soil mechanics and Pile Dynamic Analysis, shall be hired by the Contractor for services ~~to observe job pile installation~~ as specified herein. The Geotechnical Consultant shall be independent of the Contractor and shall have no employee of employer relationship which could constitute a conflict of interest.

1.4.6 Installation Procedures

a. Submit information on the type of equipment proposed to be used, proposed methods of operation, pile driving plan including proposed sequence of driving, and details of all pile driving equipment and accessories.

b. Provide details of pile driving equipment and a Wave Equation Analysis of pile drivability for selection of the hammer along with a statement of driving procedures. The Wave Equation Analysis is to be completed by the Contractor's Geotechnical Consultant for each location ~~adjacent to the precast prestressed concrete test pile location~~ where different subsurface conditions exist, and is to include the following information pertaining to the proposed pile driving equipment:

   (1) Provide a Pile and Driving Equipment Data Form for each proposed pile hammer and pile type combination.

   (2) Copies of computer input and output sheets and graphs showing soil resistance versus blow count as well as maximum tension and compression stresses versus blow count. Analysis shall be run at the estimated tip elevation as well as other required elevations to define maximum stress levels in the pile during driving.

   (3) Bulkhead piles may be installed with a vibratory hammer, however an impact hammer may be required in the event that the pile refuses on a hard or very dense layer and the vibratory hammer cannot install the piles to the required tip elevation. The Contractor shall perform wave equation analyses demonstrating the proposed vibratory and impact hammer are suitable to install the sheet and pipe piles to the required tip elevation without overstressing the piles.

1.5 DELIVERY, STORAGE, AND HANDLING

1.5.1 Steel Sheet Piling

Materials delivered to the site shall be new and undamaged and shall be accompanied by certified test reports. Provide the manufacturer's logo and mill identification mark on the sheet piling as required by the referenced specifications. Store and handle sheet piling in the manner recommended by the manufacturer to prevent permanent deflection, distortion or damage to the interlocks; as a minimum, support on level blocks or racks spaced not more than 10 feet apart and not more than 2 feet from the ends. Storage of sheet piling should also facilitate required inspection activities and prevent damage to coatings and corrosion prior to installation.

1.5.2 Pipe Piles

Stack piles during delivery and storage so that each pile is maintained in a straight position and is supported every 10 feet or less along its length (ends inclusive) to prevent exceeding the maximum camber or sweep. Do not stack piles more than 5 feet high.

Lift piles using a cradle or multiple points pick-up to ensure that the maximum permissible camber or sweep is not exceeded due to insufficient support, except that a one-point pick-up may be used for lifting piles that are not extremely long into the driving leads. Point pick-up devices must be of the type that clamp to both pile flanges at each pick-up point. Holes may be burned in the flanges or webs of piles above the cutoff length for lifting piles into the leads. Do not drag piles across the ground.

Inspect piles for excessive camber and sweep and for damage before transporting them from the storage area to the driving area and immediately prior to placement in the driving leads. Camber, curvature in the pile in the direction normal to the pile flanges, must be measured with the pile flange base laying on a flat surface and is the distance between the flange base at the mid-length of the pile and the flat surface. Sweep, curvature in the pile in the direction parallel to the pile flanges, must be measured with the pile flange tips laying on a flat surface and is the distance between the flange tips at the mid-length of the pile and the flat surface. The maximum permissible camber or sweep is 2 inches over the length of the pile. Piles having excessive camber or sweep will be rejected.

1.6 MEASUREMENT AND PAYMENT

No separate payment shall be made for Work under this specification. Payment for Work associated with this specification shall be included in the overall Lump Sum project cost.

PART 2 PRODUCTS

2.1 STEEL PILING

Main combi-wall system shall meet the following section requirements:

Sheet pile: ~~AZ23-800~~NZ 22, or approved equal
42" Pipe: 0.625" wall thickness

Anchor wall system shall meet the following section requirements:

Sheet pile: ~~AZ27-800~~ NZ 28, or approved equal

Return combi-wall system shall meet the following section requirements:

Sheet pile: ~~AZ23-800~~ NZ 22, or approved equal
42" Pipe (locations as shown on the drawings): 0.625" wall thickness
36" Pipe (locations as shown on the drawings): 0.500" wall thickness

Submit detail drawings for piling, including fabricated sections, showing complete piling dimensions and details, driving sequence and location of installed piling.

a. Include in the drawings details of top protection, special reinforcing tips, tip protection, lagging, splices, fabricated additions to plain

piles, cut-off method, corrosion protection, and dimensions of templates and other temporary guide structures for installing piling. Provide details of the method for handling piling to prevent permanent deflection, distortion or damage to piling interlocks.

b. Metal sheet piling shall be hot-rolled steel sections conforming to ASTM A690/A690M, and pipe piles shall conform to ASTM A252 Grade 3.

c. For protection of the steel piling, coat it in accordance with Section 09 97 13.00 20.

2.1.1 Interlocks

The interlocks of sheet piling shall be free-sliding, provide a swing angle suitable for the intended installation but not less than 5 degrees when interlocked, and maintain continuous interlocking when installed.

2.1.2 General Requirements

Steel piling including special fabricated sections shall be full-length sections of the dimensions shown. Provide fabricated sections conforming to the requirement and the piling manufacturer's recommendations for fabricated sections. Provide steel piling with standard pulling holes. Metalwork fabrication for steel piling shall be as specified and in Section 05 12 00.

2.2 TESTS, INSPECTIONS, AND VERIFICATIONS

Requirements for material tests, workmanship and other measures for quality assurance shall be as specified and in Section 05 12 00 STRUCTURAL STEEL.

2.2.1 Materials Tests

Submit certified materials tests reports showing that steel piling and appurtenant metal materials meet the specified requirements, for each shipment and identified with specific lots prior to installing materials. Material test reports shall meet the requirements of ASTM A6/A6M and ASTM A252. Perform materials tests conforming to the following requirements.Sheet piling and appurtenant materials shall be tested and certified by the manufacturer to meet the specified chemical, mechanical and section property requirements prior to delivery to the site. Testing for mechanical properties shall be performed after the completion of all rolling and forming operations. Testing of sheet piling shall meet the requirements of ASTM A6/A6M and testing of pipe piling shall meet the requirements of ASTM A252.

PART 3 EXECUTION

3.1 INSTALLATION

3.1.1 Existing Structures

Structures adjacent to the subject site may be impacted by pile-driving induced vibrations. Provide the services of a professional structural building engineer licensed in the State of Texas to conduct building condition surveys of adjacent structures before and after pile installation operations, at no additional cost to the Owner. Monitor pile-driving induced vibrations with seismographs during the test pile program to determine if a vibration monitoring program will be needed during the

production pile installation program. If excessive vibrations are measured during pile driving, predrilling may be used to reduce vibrations during pile driving. Work and materials associated with vibration monitoring shall be provided at no additional cost to the Owner.

3.1.2 Pile Driving Equipment

3.1.2.1 Driving Hammers

Hammers shall be steam, air, or diesel drop, single-acting, double-acting, differential-acting , or vibratory type. The driving energy of the hammers shall be as recommended by the manufacturer for the piling weights and subsurface materials to be encountered. Repair damage to piling caused by use of a pile hammer with excess delivered force or energy.

3.1.2.2 Jetting Equipment

Jetting will not be permitted except as need to remove obstructions and as approved by the Owner's Representative.

3.1.3 PRELIMINARY WORK

3.1.3.1 Wave Equation Analysis of Pile Drivability

a. Prior to driving any pile, the Contractor shall submit a pile Wave Equation Analysis, performed by his Geotechnical Consultant, for each size pile and distinct subsurface profile condition. These analyses shall take into account the proposed hammer assembly, the pile properties and estimated lengths and the soil properties anticipated to be encountered throughout the installed pile length based on static capacity analysis with consideration of driving gain/loss factors. Only one specific model of pile hammer may be used for each pile type and capacity.

b. The Wave Equation Analysis shall demonstrate that the piles will not be damaged during driving, and shall indicate that the driving stresses will be maintained within the limits below.

Allowable Driving Stresses

Steel Piles

Compression - 0.9 fy
Tension - 0.9 fy

Where fy is yield strength of steel

Concrete

Compression - 0.85f'c minus UPL
Tension - (3 times (the square root of f'c)) plus UPL

f'c is compressive strength of concrete
UPL = Unit Prestress after Losses
(Obtain values from pile manufacturer)

c. Upon completion of the dynamic and static testing programs outlined in this specification section, a refined Wave Equation Analysis shall be performed taking into consideration the evaluated capacities, gain/loss

factors and recommended production pile lengths. Production pile driving criteria shall be developed based on the results of the refined Wave Equation Evaluations.

d. All pile driving equipment furnished by the Contractor shall be subject to the approval of the Contractor's Geotechnical Consultant. Complete the attached pile and driving equipment data form, including hammer information, in full as part of the submittal of the results of the Wave Equation Analyses.

e. The cost of performing the Wave Equation Analyses shall be paid for by the Contractor and included in the base bid.

3.1.3.2 Order List

The Contractor shall submit to the Owner's Representative for approval, an itemized list for piles prior to placing the order with the supplier. The list shall indicate the pile lengths required at each location as shown on the plans and the corresponding ordered length of each pile.

3.1.3.3 Pile Length Markings

The Contractor shall mark each pile prior to driving with horizontal lines at one foot intervals, and the number of feet from pile tip at 5 foot intervals.

3.1.4 Placing and Driving

3.1.4.1 Placing

Any excavation required within the area where pilings are to be installed shall be completed prior to placing pilings. Pilings properly placed and driven shall be interlocked throughout their length with adjacent pilings to form a continuous diaphragm throughout the length or run of piling wall.

Provide temporary wales, templates, or guide structures to ensure that the pilings are placed and driven to the correct alignment. Use a system of structural framing sufficiently rigid to resist lateral and driving forces and to adequately support the piling until design tip elevation is achieved. Use two templates, at least, when placing each piling at third points. Templates shall not move when supporting the piling. Fit templates with wood blocking to bear against the web of each alternate sheet pile and hold the sheet pile at the design location alignment. Provide outer template straps or other restraints as necessary to prevent the sheets from warping or wandering from the alignment. Mark template for the location of the leading edge of each alternate sheet pile. If in view, also mark the second level to assure that the piles are vertical and in position. If two guide marks cannot be seen, other means shall be used to keep the sheet pile vertical along its leading edge.

Mark piling at a given distance from the bottom so that the marks are visible above water and the final pile tip elevation can be determined.

3.1.4.2 Tolerances

A. The top of any sheet piling for the straight bulkhead shall not vary from the design horizontal alignment of the sheet piling wall by more than two (2) inches.

B. The top of piling shall not vary from the design top elevation plus or minus one (1) inch.

C. The top of tubular or wide-flange piling shall not vary from the design horizontal alignment by more than two (2) inches.

D. No single pile shall be out of plumb by more than six (6) inches horizontally over its entire length.

E. No single sheet pile shall vary from the design alignment of its horizontal axis by more than 1/8 inch per vertical foot.

F. The above tolerances are maximum deviations from the design. The average deviation from design should be equal to zero. No more than 15 percent of all sheets shall vary from the design elevations and alignment by more than one half of the above tolerances.

3.1.4.3 Driving

Submit records of the completed piling driving operations, including a system of identification which shows the disposition of approved piling in the work, driving equipment performance data, piling penetration rate data, piling dimensions and top and bottom elevations of installed piling. The format for driving records shall be as directed. Drive pilings with the proper size hammer and by approved methods so as not to subject the pilings to damage and to ensure proper interlocking throughout their lengths.

a. Maintain driving hammers in proper alignment during driving operations by use of leads or guides attached to the hammer. Caution shall be taken in the sustained use of vibratory hammers when a hard driving condition is encountered to avoid interlock-melt or damages. Discontinue the use of vibratory hammers and impact hammers employed when the penetration rate due to vibratory loading is one foot or less per minute.

b. Employ a protecting cap in driving when using impact hammers to prevent damage to the tops of pilings. Remove and replace pilings damaged during driving or driven out of interlock at the Contractor's expense.

c. Drive pilings without the aid of a water jet.

d. Take adequate precautions to ensure that pilings are driven plumb. Where possible, drive Z-pile with the ball end leading. If an open socket is leading, a bolt or similar object placed in the bottom of the interlock will minimize packing material into it and ease driving for the next sheet. If at any time the forward or leading edge of the piling wall is found to be out-of-plumb in the plane of the wall the piling being driven shall be driven to the required depth and tapered pilings shall be provided and driven to interlock with the out-of-plumb leading edge or other approved corrective measures shall be taken to insure the plumbness of succeeding pilings. The maximum permissible taper for any tapered piling shall be 1/8 inch per foot of length.

e. Pilings in each run or continuous length of piling wall shall be driven alternately in increments of depth to the required depth or elevation. No piling shall be driven to a lower elevation than those behind it in the same run except when the pilings behind it cannot be driven deeper. Incrementally sequence driving of individual piles such that the tip of any pile shall not be more than 4 feet below that of any

adjacent pile. When the penetration resistance exceeds five blows per inch, the tip of any pile shall not be more than 2 feet below any adjacent pile. If the piling next to the one being driven tends to follow below final elevation it may be pinned to the next adjacent piling.

f. If obstructions restrict driving a piling to the specified penetration, the obstructions shall be removed or penetrated with a chisel beam. If the Contractor demonstrates that removal or penetration is impractical, make changes in the design alignment of the piling structure as directed to ensure the adequacy and stability of the structure. Pilings shall be driven to depths shown and shall extend up to the elevation indicated for the top of pilings. A tolerance of 3 inches above the indicated top elevation will be permitted. Pilings shall not be driven within 100 feet of concrete less than 7 days old.

g. ~~Pre-augering or s~~Spudding of piles will not be permitted.

3.1.5 Cutting-Off and Splicing

Pilings driven to refusal or to the point where additional penetration cannot be attained and are extending above the required top elevation in excess of the specified tolerance shall be cut off square to the required elevation. Splices are only permitted as follows.

a. Piles driven below grade and piles which, because of damaged heads, have been cut off to permit further driving and are then too short to reach final grade shall be extended to the required grade by welding an additional length, when directed, without cost to the Owner. A back-up plate of the same thickness as the pile shall be used.

b. Should splicing of piles be necessary as determined by the Owner's Representative, the splices shall be made by an approved butt weld making full penetration. Welds made in adjoining piles shall be staggered a minimum of two feet vertically. Splice shall be made with a 12 inch back-up plate of the same

c. Thickness as the pile section, with 6-inches above splice and 6-inches below splice. Back-up plate shall be fillet welded to pile section.

d. All splices shall be power wire brushed and coated in accordance with section entitled "Marine Coatings".

e. Piles, which because of damaged heads, have been cut off to permit further driving and are then too short to reach final grade shall be extended to the required grade by welding an additional length, when directed, without cost to the Owner.

The tops of pilings excessively battered during driving shall be trimmed when directed, at no cost to the Owner. Piling cut-offs shall become the property of the Contractor and shall be removed from the site.

Cut holes in pilings for bolts, rods, drains or utilities in a neat and workmanlike manner, as shown or as directed. Use a straight edge in cuts made by burning to avoid abrupt nicks. Bolt holes in steel piling shall be drilled or may be burned and reamed by approved methods which will not damage the surrounding metal. Holes other than bolt holes shall be

reasonably smooth and the proper size for rods and other items to be inserted. Do not use explosives for cutting.

3.1.6 Tie Rod System

Tie rods shall be in an articulated tie rod system accordance with specification Section 31 68 13 TIE RODS. Tie rod system, including articulated connections, connections to the bulkhead pipes, turnbuckles, and other components shall be designed by the tie rod manufacturer to develop the full capacity and performance of the tie rod system. Location and quantity of articulated connections shall be determined by the manufacturer. Tie rod system shall be designed to accommodate a total vertical settlement of 5 inches over a 30 year period.

Tie rods shall be pretensioned to 140 kips each. Refer to the phasing plan for sequencing of tie rod installation, rigid inclusion installation, load transfer platform construction, pretensioning, and backfilling. The minimum limits of the load transfer mat constructed prior to tie rod pretensioning shall be as necessary to develop passive pressure in front of the bulkhead anchor wall and behind the combi-wall to prevent excessive wall movement or stresses during prestressing. Tie rod pretensioning procedure shall be determined by the tie rod manufacturer.

3.1.7 Inspection of Driven Piling

Perform continuous inspection during pile driving. Inspect all piles for compliance with tolerance requirements. Bring any unusual problems which may occur to the attention of the Owner's Representative. Inspect the interlocked joints of driven pilings extending above ground. Pilings found to be out of interlock shall be removed and replaced at the Contractor's expense. Use divers to inspect underwater interlocked joints of sheet piling. Owner divers may also inspect the interlocked joints. The inspection of piling shall be performed after driving is completed, prior to installing geotextile fabric, backfilling and pile cap construction.

3.1.8 Pulling and Redriving

Submit the proposed method of pulling piling, prior to pulling any piling. Pull, as directed, selected pilings after driving to determine the condition of the underground portions of pilings. Any piling so pulled and found to be damaged, to the extent that its usefulness in the structure is impaired, shall be removed and replaced at the Contractor's expense. Pilings pulled and found to be in satisfactory condition shall be redriven when directed.

3.2 REMOVAL

The removal of pilings shall consist of pulling, sorting, cleaning the interlocks, inventorying and storing previously installed pilings as shown and directed.

3.2.1 Pulling

The method of pulling piling shall be approved. Provide pulling holes in pilings, as required. Extractors shall be of suitable type and size. Care shall be exercised during pulling of pilings to avoid damaging piling interlocks and adjacent construction. If the Owner's Representative determines that adjacent permanent construction has been damaged during pulling, the Contractor will be required to repair this construction at no

cost to the Owner. Pull pilings one sheet at a time. Pilings fused together shall be separated prior to pulling, unless the Contractor demonstrates, to the satisfaction of the Owner's Representative, that the pilings cannot be separated. The Contractor will not be paid for the removal of pilings damaged beyond structural use due to proper care not being exercised during pulling.

3.2.2 Sorting, Cleaning, Inventorying and Storing

Pulled pilings shall be sorted, cleaned, inventoried and stored by type into groups as:

a. Piling usable without reconditioning.

b. Piling requiring reconditioning.

c. Piling damaged beyond structural use.

3.3 INSTALLATION RECORDS

Maintain a pile driving record for each pile driven. Indicate on the installation record: installation dates and times, type and size of hammer, rate of operation, total driving time, dimensions of driving helmet and cap used, blows required per foot for each foot of penetration, final driving resistance in blows for final 6 inches, pile locations, tip elevations, ground elevations, cut-off elevations, and any reheading or cutting of piles. Record any unusual pile driving problems during driving. Submit complete records to the Owner's Representative.

-- End of Section --

SECTION 31 62 13.20

PRECAST/PRESTRESSED CONCRETE PILES
08/09

PART 1 GENERAL

Subject to the General and Supplementary Conditions, this section includes the supply of all labor, equipment, materials, and incidentals for precast and prestressed concrete piles.

1.1 REFERENCES

The publications listed below form a part of this specification to the extent referenced. The publications are referred to within the text by the basic designation only.

AMERICAN CONCRETE INSTITUTE (ACI)

ACI 211.1	(1991; R 2009) Standard Practice for Selecting Proportions for Normal, Heavyweight and Mass Concrete
ACI 214R	(2011) Evaluation of Strength Test Results of Concrete
ACI 318	(2014; Errata 1-2 2014; Errata 3-5 2015; Errata 6 2016; Errata 7-9 2017) Building Code Requirements for Structural Concrete (ACI 318-14) and Commentary (ACI 318R-14)
ACI SP-66	(2004) ACI Detailing Manual

ASTM INTERNATIONAL (ASTM)

ASTM A1064/A1064M	(2017) Standard Specification for Carbon-Steel Wire and Welded Wire Reinforcement, Plain and Deformed, for Concrete
ASTM A615/A615M	(2016) Standard Specification for Deformed and Plain Carbon-Steel Bars for Concrete Reinforcement
ASTM A706/A706M	(2016) Standard Specification for Low-Alloy Steel Deformed and Plain Bars for Concrete Reinforcement
ASTM C1017/C1017M	(2013; E 2015) Standard Specification for Chemical Admixtures for Use in Producing Flowing Concrete
ASTM C1202	(2017a) Standard Test Method for Electrical Indication of Concrete's Ability to Resist Chloride Ion Penetration
ASTM C1218/C1218M	(2017) Standard Test Method for Water-Soluble Chloride in Mortar and

	Concrete
ASTM C1240	(2014) Standard Specification for Silica Fume Used in Cementitious Mixtures
ASTM C1260	(2014) Standard Test Method for Potential Alkali Reactivity of Aggregates (Mortar-Bar Method)
ASTM C136/C136M	(2014) Standard Test Method for Sieve Analysis of Fine and Coarse Aggregates
ASTM C143/C143M	(2015) Standard Test Method for Slump of Hydraulic-Cement Concrete
ASTM C150/C150M	(2018) Standard Specification for Portland Cement
ASTM C1567	(2013) Standard Test Method for Potential Alkali-Silica Reactivity of Combinations of Cementitious Materials and Aggregate (Accelerated Mortar-Bar Method)
ASTM C172/C172M	(2017) Standard Practice for Sampling Freshly Mixed Concrete
ASTM C260/C260M	(2010a; R 2016) Standard Specification for Air-Entraining Admixtures for Concrete
ASTM C295/C295M	(2012) Petrographic Examination of Aggregates for Concrete
ASTM C31/C31M	(2018b) Standard Practice for Making and Curing Concrete Test Specimens in the Field
ASTM C33/C33M	(2018) Standard Specification for Concrete Aggregates
ASTM C39/C39M	(2018) Standard Test Method for Compressive Strength of Cylindrical Concrete Specimens
ASTM C494/C494M	(2017) Standard Specification for Chemical Admixtures for Concrete
ASTM C595/C595M	(2018) Standard Specification for Blended Hydraulic Cements
ASTM C618	(2017a) Standard Specification for Coal Fly Ash and Raw or Calcined Natural Pozzolan for Use in Concrete
ASTM C989/C989M	(2018) Standard Specification for Slag Cement for Use in Concrete and Mortars
ASTM D1179	(2016) Standard Test Methods for Fluoride Ion in Water
ASTM D3867	(2016)Standard Test Methods for

	Nitrite-Nitrate in Water
ASTM D512	(2012) Chloride Ion in Water

U.S. FEDERAL HIGHWAY ADMINISTRATION (FHWA)

FHWA-NHI-16-009	Design and Construction of Driven Pile Foundations – Volume II

PRECAST/PRESTRESSED CONCRETE INSTITUTE (PCI)

PCI MNL-116	(1999) Manual for Quality Control for Plants and Production of Structural Precast Concrete Products, 4th Edition

TEXAS DEPARTMENT OF TRANSPORTATION

TxDOT Specifications	Standard Specifications for Construction and Maintenance of Highways, Streets, and Bridges
TxDOT PMFP	Prestressed Member Fabrication Plants (Multi-Project)
TxDOT CRSQC	TexasDOT Concrete Rated Source Quality Catalogue
TxDOT MPL	TexasDOT Material Producer List

1.2 MODIFICATION TO REFERENCES

In the ACI publications, reference to the "Building Official," the "Structural Engineer" and the "Architect/Engineer" must be interpreted to mean the Owner's Representative.

1.3 SUBMITTALS

Contractor shall provide submittals in conformance with the requirements of the General and Supplementary Conditions, and in accordance with Section 01 33 00 SUBMITTAL PROCEDURES. Submit the following:

SD-01 Preconstruction Submittals

Installation Procedures

Geotechnical Consultant Documentation

Wave Equation Analysis

Order List

Precast manufacturer's quality control procedures

Provide instructions and procedures on how the Contractor will assist the Owner in the processes of Dynamic Pile Testing, Inspection and Monitoring of piles during installation and testing.

Manufacturer Qualifications

Driving Helmets And Cushion Blocks

Erection Procedure

Build-Ups

Quality Control Plan

SD-02 Shop Drawings

Piles

Splices

SD-03 Product Data

Pile Driving Equipment

Submit descriptions of pile driving equipment, including hammers, power packs, driving helmets, cap blocks, pile cushions, leads, extractors, jetting equipment, and preboring equipment at least 30 days prior to commencement of work.

SD-05 Design Data

Concrete mix design

Submit a concrete mix design before concrete is placed, for each type of concrete used for the piles.

Changes In Proportions

SD-06 Test Reports

Aggregates

Concrete Compressive Strength

Submit concrete cylinder compressive strength test results

~~Test piles~~

~~Dynamic Pile Analysis~~

Submit a summary report of dynamic test results for test piles within 7 calendar days of completing field work. For permanent piles, submit a field summary report within one (1) day of testing.

~~Performance Report~~

SD-07 Certificates

Aggregates

Silica Fume Manufacturer's Representative

Prestressing steel

SD-09 Manufacturer's Field Reports

Manufacturer's Technical Representative

SD-11 Closeout Submittals

Pile records

~~Submit pile and test pile records.~~

1.4 RELATED SECTIONS

Drawings and general provisions of the Contract, including General and Supplementary Conditions and other Division 01 Specification Sections, apply to this Section. Other technical specification sections that may relate to this section, include but are not limited to the following:

A. Section 31 09 16.23 - DRIVEN PILE LOAD TESTS
B. Section 03 45 33 - PRECAST STRUCTURAL CONCRETE

1.5 QUALITY ASSURANCE

Submit a Quality Control Plan in accordance with section 01 40 00.00 QUALITY REQUIREMENTS. The plan shall include a written of the following Quality Control specifics, at a minimum:

QC Personnel
Procedures for pile materials including fabrications, delivery, handling and storage
Procedures for load testing
Procedures for locating piles and templates
Procedures for driving
Procedures for installation sequencing
Procedures for inspections
Procedures for mitigation and corrective actions

1.5.1 Manufacturer Qualifications

In accordance with TxDOT PMFP and PCI MNL-116. Submit plant certifications.

1.5.2 Piles

Prepare in accordance with ACI SP-66. Indicate placement of reinforcement including tendons. Indicate location of special embedded or attached lifting devices, employment of pick-up points, support points other than pick-up points, and any other methods of pick-up. Provide certification of a Professional Engineer registered in any jurisdiction of the U. S. or its territories, that layout and details of reinforcement and tendons conform with that shown on the structural design drawings.

1.5.3 Quality Control Procedures

Submit the precast manufacturer's quality control procedures and inspection records established in accordance with PCI MNL-116.

1.5.4 Concrete Mix Design

In accordance with TxDOT Specifications Section 421.4.2.1, Class H concrete, modified as follows. The minimum compressive strength of concrete at 28 days must be 6000 psi. For marine exposure, ensure a dense concrete

free of shrinkage cracks, with a minimum degree of permeability. The maximum water cement ratio must be 0.40. Air content shall be 4.5%-6.5%.

Certify, using a Owner-approved independent commercial testing laboratory, that proportioning of mix is in accordance with ACI 211.1 or ACI 318 for specified strength and is based on aggregate data which has been determined by laboratory tests during last twelve months. Submit a complete list of materials including type; brand; source and amount of cement, fly ash, pozzolan, ground slag, and admixtures; and applicable reference specifications. Submit additional data regarding concrete aggregates if the source of aggregate changes. Submittal shall clearly indicate where each mix design will be used when more than one mix design is submitted.

1.5.5 Geotechnical Consultant Documentation

~~The services of an independent, Registered Professional Geotechnical Engineer, experienced in soil mechanics and Pile Dynamic Analysis, shall be hired by the Contractor to observe test pile installation and job pile installation as specified herein. The Geotechnical Consultant shall be independent of the Contractor and shall have no employee of employer relationship which could constitute a conflict of interest.~~The services of an independent, Registered Professional Geotechnical Engineer, experienced in soil mechanics and Pile Dynamic Analysis, shall be hired by the Contractor for services as specified herein. The Geotechnical Consultant shall be independent of the Contractor and shall have no employee of employer relationship which could constitute a conflict of interest.

1.5.6 Installation Procedures

a. Submit information on the type of equipment proposed to be used, proposed methods of operation, pile driving plan including proposed sequence of driving, and details of all pile driving equipment and accessories.

b. Provide details of pile driving equipment and a Wave Equation Analysis of pile drivability for selection of the hammer along with a statement of driving procedures. The Wave Equation Analysis is to be completed by the Contractor's Geotechnical Consultant for each test pile location where different subsurface conditions exist and is to include the following information pertaining to the proposed pile driving equipment:

   (1) Provide a Pile and Driving Equipment Data Form for each proposed pile hammer and pile type combination.

   (2) Copies of computer input and output sheets and graphs showing soil resistance versus blow count as well as maximum tension and compression stresses versus blow count. Analysis shall be run at the estimated tip elevation as well as other required elevations to define maximum stress levels in the pile during driving.

c. Provide detailed procedures for conducting the dynamic pile load test and equipment to be used for conducting the load test. The detailed description shall explain how specific information of pile performance will be evaluated.

1.5.7 Silica Fume Manufacturer's Representative

The manufacturer's representative must be present at mix plant to ensure proper mix, including high range water reducer, and batching methods

during the first 3 days of concrete mix preparation and placement. After which the manufacturer's representative must designate a representative at the concrete producer's plant to ensure the concrete mix procedures meet the silica fume manufacturer's recommendations.

1.6 DELIVERY, STORAGE, AND HANDLING

Piles shall be stored, handled, and transported in accordance with PCI MNL-116 except as follows. Methods used for handling and storage of piles shall be such that the piles are not subjected to excessive bending stress, cracking, spalling, or other damage.

1.6.1 Damaged Piles

The Contractor shall inspect each pile for sweep and structural damage such as cracking and spalling before transporting them to the project site and immediately prior to placement in the driving leads. Any unusual cracks (cracks other than crazing, surface drying, shrinkage cracks and end cracks) shall be brought to the attention of the Owner's Representative. Piles which are damaged during delivery, storage, or handling to the extent they are rendered unsuitable for the work, in the opinion of the Owner's Representative, shall be rejected and removed from the project site, or may be repaired, if approved, at no cost to the Owner.

1.6.1.1 Repairable Cracks

Piles with cracks equal to or greater than 0.006 inches but less than 0.06 inches shall be rejected or repaired. As an alternate to pile rejection, the Contractor may submit a proposal to repair deficient piles, which shall be restored prior to driving to provide its required design capacity, perform its intended function in the structure, and take into consideration long term durability in corrosive environment.

1.6.1.2 Non-Repairable Cracks

Piles with cracks equal to or greater than 0.06 inches shall be rejected.

1.6.2 Pile Sweep

Sweep shall be limited to 1/8 inch per 10 feet over the length of the pile. Piles having excessive sweep shall be rejected.

1.7 MEASUREMENT AND PAYMENT

No separate payment shall be made for Work under this specification, with the exception of predrilling piles, if predrilling is determined to be required and approved by the Port.

Payment for Work associated with this specification shall be included in the overall Lump Sum project cost, except as noted below:

Provide a unit cost and unit duration, as identified in the bid form, for each pile that requires predrilling due to unavoidable obstructions encountered or inability to drive piles. Predrilling is subjected to prior approval from the Port.

PART 2 PRODUCTS

2.1 MATERIALS

2.1.1 Cementitious Materials

Cementitious materials shall be portland cement, blended cement or portland cement in combination with natural pozzolan or fly ash or ground granulated blast furnace slag and conforms to appropriate specifications listed below.

2.1.1.1 Portland Cement

Provide from producers listed in the TxDOT MPL for Hydraulic Cement, Type II or Type III low alkali cement, with a maximum tricalcium aluminate (C3A) content of 8 percent,otherwise provide in accordance with ASTM C150/C150M.

2.1.1.2 Blended Cements

Blended cement shall conform to ASTM C595/C595M, Type IP or IS, including the optional requirement for mortar expansion and sulfate soundness and consist of a mixture of ASTM C150/C150M Type II cement and a complementary cementing material. The slag added to the Type IS blend shall be ASTM C989/C989M ground granulated blast-furnace slag. The pozzolan added to the Type IP blend shall be ASTM C618 Class F and shall be interground with the cement clinker. The manufacturer shall state in writing that the amount of pozzolan in the finished cement will not vary more than plus or minus 5 mass percent of the finished cement from lot-to-lot or within a lot. The percentage and type of mineral admixture used in the blend shall not change from that submitted for the aggregate evaluation and mixture proportioning.

2.1.1.3 Pozzolan

2.1.1.3.1 Fly Ash

Provide Fly Ash from producers listed in the TxDOT MPL for Fly Ash, otherwise fly ash shall conform to ASTM C618, Class F, including the optional requirements for uniformity and effectiveness in controlling Alkali-Silica reaction and shall have a loss on ignition not exceeding 6 percent. Class F fly ash for use in mitigating Alkali-Silica Reactivity shall have a Calcium Oxide (CaO) content of less than 8 percent and a total equivalent alkali content less than 1.5 percent. Add with cement.

2.1.1.3.2 Raw or Calcined Natural Pozzolan

Natural pozzolan shall be raw or calcined and conform to ASTM C618, Class N, including the optional requirements for uniformity and effectiveness in controlling Alkali-Silica reaction and shall have an on ignition loss not exceeding 3 percent. Class N pozzolan for use in mitigating Alkali-Silica Reactivity shall have a Calcium Oxide (CaO) content of less than 13 percent and total equivalent alkali content less than 3 percent.

2.1.1.3.3 Ultra Fine Fly Ash and Ultra Fine Pozzolan

Provide Ultra Fine Fly Ash (UFFA) and Ultra Fine Pozzolan (UFP) from producers listed in the TxDOT MPL for Fly Ash, otherwise the materials shall conform to ASTM C618, Class F or N, and the following additional requirements:

a. The strength activity index at 28 days of age shall be at least 95 percent of the control specimens.

b. The average particle size shall not exceed 6 microns.

c. The sum of SiO_2 + Al_2O_3 + Fe_2O_3 shall be greater than 77 percent.

2.1.1.4 Ground Granulated Blast-Furnace (GGBF) Slag

Ground Granulated Blast-Furnace Slag shall conform to ASTM C989/C989M, Grade 100 or Grade 120. Add with cement.

2.1.1.5 Silica Fume

Provide silica fume from producers listed in the TxDOT MPL for Silica Fume, otherwise silica fume shall conform to ASTM C1240, including the optional limits on reactivity with cement alkalis. Silica fume may be furnished as a dry, densified material or as slurry. Proper mixing is essential to accomplish proper distribution of the silica fume and avoid agglomerated silica fume which can react with the alkali in the cement resulting in premature and extensive concrete damage. Supervision at the batch plant, finishing, and curing is essential. Provide at the Contractor's expense the services of a manufacturer's technical representative, experienced in mixing, proportioning, placement procedures, and curing of concrete containing silica fume. This representative must be present on the project prior to and during at least the first 4 days of concrete production and placement using silica fume. A High Range Water Reducer (HRWR) shall be used with silica fume. Finishing may be more difficult. Proper curing is essential because there is a tendency for plastic shrinkage cracking.

2.1.1.6 Complementary Cementing Materials (AKA Supplementary Cementitious Materials (SCM) Content (SCM))

The concrete mix shall always contain complementary cementing materials whether or not the aggregates are found to be reactive in accordance with the subpart entitled "Aggregates". Concrete mixtures shall be designed and proportioned to meet the requirements for strength, contractibility, shrinkage, and service life.

Supplemental Cementitious Materials (SCM) Content

The concrete mix shall contain one of the SCMs listed below, or a linear combination thereof.

SUPPLEMENTARY CEMENTITIOUS MATERIALS CONTENT		
SCM	Minimum Content	Maximum Content
Class N Pozzolan or Class F Fly Ash with SiO_2 plus Al_2O_3 plus Fe_2O_3 greater than 70 percent	25 percent	35 percent
Class N Pozzolan or Class F Fly Ash with with SiO_2 plus Al_2O_3 plus Fe_2O_3 greater than 80 percent	20 percent	35 percent

SUPPLEMENTARY CEMENTITIOUS MATERIALS CONTENT		
SCM	Minimum Content	Maximum Content
Class N Pozzolan or Class F Fly Ash with with SiO_2 plus Al_2O_3 plus Fe_2O_3 greater than 90 percent	15 percent	35 percent
GGBF Slag	30 percent	50 percent
Silica Fume	5 percent	10 percent

2.1.2 Water

Provide in accordance with TxDOT Specifications Item 421.2.5.

2.1.3 Aggregates

Provide from suppliers listed in the TxDOT CRSQC and in accordance with TxDOT Specifications Item 421.2.6, otherwise comply with ASTM C33/C33M Class 4S, except as modified herein.

a. Provide gradation of individual aggregate sizes using standard concrete aggregate sieves including 1-1/2 inches, one inch, 3/4 inch, 1/2 inch, 3/8 inch, No. 4, No. 8, No. 16, No. 30, No. 50, and No. 100.

b. Provide aggregates for exposed concrete from one source. Aggregate reactivity shall be limited per the subpart entitled "Aggregates". Provide aggregate containing no deleterious material properties as identified by ASTM C295/C295M.

c. Where a size designation is indicated, that designation indicates the nominal maximum size of the coarse aggregate.

d. Aggregate tests shall be conducted within 6 months from the date of concrete mixture submittal.

e. Provide ASTM C1260 or ASTM C1567 test results conducted with 6 months of the submittal date showing the proposed coarse and fine aggregates are either: innocuous to alkali silica reaction; or that reactivity has been mitigated by the proposed cementitious materials as modified herein. Conduct ASTM C1260 tests on each aggregate source separately. Fine and coarse aggregates to be used in all concrete shall be evaluated and tested for alkali-aggregate reactivity. Both coarse aggregate size groups shall be tested. Test results of the individual aggregates shall have a measured expansion equal to or less than 0.08 percent after 28 days of immersion in a 1M NaOH solution at 176 degrees.

f. Should the test data indicate an expansion of greater than 0.08 percent, the aggregate(s) shall be rejected or additional testing shall be performed as follows: utilize the Contractor's proposed low alkali portland cement, blended cement, and/or complementary cementing materials, in combination with each individual aggregate. If SCMs are being evaluated, the testing shall be in accordance with ASTM C1567. Determine the quantity that will meet all the requirements of these specifications and that will lower the expansion equal to or less than 0.08 percent after 28 days of immersion in a 1N NaOH solution. Mixture

proportioning shall be based on the highest percentage of SCM required to mitigate ASR-reactivity.

2.1.4 Admixtures

Provide admixtures from producers listed in the TxDOT MPL for Chemical Admixtures for Concrete, otherwise provide as follows.

a. Provide certifications that chemical admixtures comply with the requirements shown in Table 5 and are compatible with each other. Use admixtures in accordance with manufacturer's recommendations, as appropriate for the climatic conditions and construction needs.

b. Do not use calcium chloride or admixtures containing chloride ion content in more than trace amounts from impurities in admixture ingredients or potable water. Provide maximum concentrations of corrosion-inducing chemicals as shown in Table 5. For concrete that may be in contact with prestressing steel tendons, the concentration shall not exceed 60 percent of the limits given in Table 5. For the concentration in grout for prestressing ducts, do not exceed 25 percent of the limits in Table 5.

Table 5 - Limits on Corrosion-Inducing Chemicals

Chemical*	Limits, Percent**	Test Method
Chlorides	0.10	ASTM D512
Fluorides	0.10	ASTM D1179
Nitrates	0.17	ASTM D3867

* Limits refer to water-soluble chemicals

** Limits are expressed as a percentage of the mass of the total cementitious materials.

c. The total alkali contribution of chemical admixtures shall not increase the total sodium-oxide equivalent content of the concrete mixture by more than 0.5 lb/yd3.

2.1.4.1 Air Entraining Admixture

Provide air entraining admixtures conforming to ASTM C260/C260M.

2.1.4.2 Accelerating Admixture

ASTM C494/C494M, Type C. Do not use on concrete topping.

2.1.4.3 Retarding Admixture

ASTM C494/C494M, Type B, D, or G. Do not use Type G on concrete topping.

2.1.4.4 Water Reducing Admixture

ASTM C494/C494M, Type A, E, or F. Do not use Type E or F on concrete topping.High Range Water Reducer (HRWR) shall be ASTM C494/C494M, Type F

and ASTM C1017/C1017M. Do not use Type F on concrete topping.

2.1.4.5 Corrosion Inhibitors

Corrosion inhibitors are considered "supplemental corrosion projection". Adjust the quantity of concrete mixing water for the mass of water in the admixture. Accelerating and set adjusted versions are acceptable Concrete setting time and mixture workability shall be evaluated. The use of supplemental corrosion protection shall not be used in lieu of the fundamental requirement to meet the defined service life using quality concrete with specified concrete cover over the steel reinforcing. Changes to the corrosion propagation period that is calculated for quality concrete due to the use of supplemental corrosion protection materials may be approved by the Owner's Representative based on evidence provided by the Contractor and reviewed by the agency's Subject Matter Expert in Concrete Materials on a case-by-case basis.

2.1.5 Reinforcement

2.1.5.1 Prestressing Steel

Provide from producers in the TxDOT MPL for "Steel Strand, Uncoated Seven-Wire Stress-Relieved and Low Relaxation for Prestressed Concrete" and in accordance with TxDOT Specifications Item 425.2.3.

2.1.5.2 Reinforcing Bars

Provide from producers listed on the TxDOT MPL for Reinforcing Steel Mills and in accordance with TxDOT Specifications Item 440.2.2.

2.1.5.3 Ties and Spirals

Steel, ASTM A1064/A1064M for spirals and ASTM A615/A615M or ASTM A706/A706M for ties.

~~2.1.5.4 Reinforcement and Protective Coating~~

~~Provide coatings in accordance with ASTM A775/A775M from producers listed on the TxDOT MPL for "Epoxy Applicators for Reinforcing Steel and Epoxy Powder Coating Sources", otherwise provide coating manufacturer's and coating applicator's test data sheets certifying that applied coating meets the requirements of the concrete system.~~

2.1.6 Anchorages and End Fittings

ACI 318.

2.1.7 Grout

Provide cement grout for prestressed piles using materials conforming to requirements stipulated herein for concrete mixes. Use admixtures, if required, known to have no injurious effects on steel or concrete. Do not use calcium chloride.

2.2 FABRICATION

2.2.1 Formwork

Formwork and dimensional tolerances shall be in accordance with PCI MNL-116,

and as specified herein. Provide forms of metal, braced and stiffened against deformation, accurately constructed, watertight, and supported on unyielding casting beds. Forms shall permit movement of pile without damage during release of prestressing force. Form precast dowel holes with galvanized flexible metal conduit.

2.2.2 Pretensioning

Pretensioning shall be performed in accordance with PCI MNL-116, and as specified herein. Use gage calibrated within last 6 months by a laboratory approved by Owner's Representative. Provide means for measuring elongation of steel to nearest 1/8 inch. Give tensioning steel a uniform prestress prior to being brought to design prestress. Induce same initial prestress in each unit when several units of prestressing steel in a pile are stretched simultaneously.

2.2.3 Casting

2.2.3.1 Conveying

Convey concrete to formwork in accordance with PCI MNL-116, and as specified herein. Clean conveying equipment thoroughly before each run. During placing, make any free vertical drop of the concrete less than 3 feet. Remove concrete which has segregated in conveying or placing.

2.2.3.2 Placing and Casting

Perform concrete casting within 3 days after pretensioning steel; however, do not deposit concrete in forms until placement of reinforcement and anchorages has been inspected and approved by pile manufacturer's quality control representative. Produce each pile of dense concrete straight with smooth surfaces with reinforcement retained in its proper position during fabrication. Use vibrator with heads smaller than the minimum distance between steel for pretensioning. Make surface of pile ends perpendicular to axis of pile. Chamfer, a minimum of 3/4 inch, ends of piles and corners of square piles.

2.2.4 Curing of Piles

Cure piles using moist or accelerated curing. Curing of piles shall be in accordance with the PCI MNL-116 except as follows.

2.2.4.1 Moist Curing

Moist cure using moist burlap coverings, plastic sheeting, or membrane curing compound until minimum strength to detension is achieved.

2.2.4.2 Accelerated Curing

After placement of concrete, moist cure for a period of 4 hours. Follow by accelerated curing until concrete has reached specified release strength. Enclose casting bed for accelerated curing with a suitable enclosure. During application of steam or heat, increase the air temperature at a rate not to exceed 40 degrees F per hour. Cure at a maximum temperature of 150 degrees F until concrete has reached specified release strength. Reduce temperature at a rate not to exceed 20 degrees F per hour until a temperature of 20 degrees F above ambient air temperature is reached. After accelerated curing, moist cure using either water or membrane curing until a total accelerated and moist curing time of 72 hours is achieved.

2.2.5 Detensioning

Detensioning shall be performed in accordance with PCI MNL-116, and as specified herein. Gradually release tension in strands from anchorage. Detension after approval by pile manufacturer's quality control representative. Perform transfer of prestressing force when concrete has reached a minimum compressive strength of 4000 psi.

2.3 PRODUCT QUALITY CONTROL

Where piling is manufactured in a plant with an established quality control program as in accordance with TxDOT PMFP and PCI MNL-116 perform product quality control in accordance with PCI MNL-116. Otherwise, set-up a product quality control system in accordance with PCI MNL-116 and perform concrete and aggregate quality control testing using an independent commercial testing laboratory approved by the Owner's Representative in accordance with the following.

2.3.1 Aggregate Tests

Take samples of fine and coarse aggregate at concrete batch plant and test. Perform mechanical analysis (one test for each aggregate size) in accordance with ASTM C136/C136M. Tabulate results of tests in accordance with ASTM C33/C33M.

2.3.2 Slump and Strength Tests

Sample concrete in accordance with ASTM C172/C172M at time concrete is deposited for each production line. Perform slump tests in accordance with ASTM C143/C143M. Mold cylinders in accordance with ASTM C31/C31M. Mold at least six cylinders per day or one for every 60 cubic yards of concrete placed, whichever is greater. Cure cylinders in same manner as piles and for accelerated curing, place at coolest point in casting bed. Perform strength tests in accordance with ASTM C39/C39M. Test two cylinders of each set at 7 days or 14 days, or at a time for establishing transfer of prestressing force (release strength) and removal of pile from forms. Test remaining cylinders of each set 28 days after molding.

2.3.3 Changes in Proportions

If, after evaluation of strength test results, compressive strength is less than specified compressive strength, make adjustments in proportions and water content and changes in temperature, moisture, and curing procedures as necessary to secure specified strength. Submit changes in mix design to Owner's Representative in writing.

2.3.4 Compressive Strength Test Results

Evaluate compressive strength test results at 28 days in accordance with ACI 214R using a coefficient of variation of 10 percent. Evaluate strength of concrete by averaging test results of each set of standard cylinders tested at 28 days. Not more than 10 percent of individual cylinders tested shall have a compressive strength less than specified design strength.

2.3.5 Chloride Ion Concentration

Sampling and determination of water soluble chloride ion content in accordance with ASTM C1218/C1218M. Maximum water soluble chloride ion

concentrations in hardened concrete at ages from 28 to 42 days contributed from the ingredients including water, aggregates, cementitious materials, and admixtures shall not exceed 0.06 percent by weight of cement.

2.3.6 Chloride Ion Penetration

To ensure the durability of concrete in marine environment, concrete shall be proportioned to have the chloride ion penetration test in accordance with ASTM C1202, and be below 3000 coulombs for concrete specimens tested at 56 days.

PART 3 EXECUTION

3.1 PILE DRIVING EQUIPMENT

3.1.1 Existing Structures

Structures adjacent to the subject site may be impacted by pile-driving induced vibrations. Provide the services of a professional structural building engineer licensed in the State of Texas to conduct building condition surveys of adjacent structures before and after pile installation operations, at no additional cost to the Owner. Monitor pile-driving induced vibrations with seismographs during the test pile program to determine if a vibration monitoring program will be needed during the production pile installation program. If excessive vibrations are measured during pile driving, predrilling may be used to reduce vibrations during pile driving. Work and materials associated with vibration monitoring shall be provided at no additional cost to the Owner.

3.1.2 Pile Hammers

Furnish a hammer capable of developing the indicated ultimate pile capacity considering hammer impact velocity; ram weight; stiffness of hammer and pile cushions; cross section, length, and total weight of pile; and character of subsurface material to be encountered. Hammer shall be capable of installing piles to the design tip elevations without developing excess driving stresses within the piles. Use the same pile hammer, operating at the same rate and in the same manner, as that used for driving test piles. Obtain required driving energy of hammer, except for diesel hammers, by use of a heavy ram and a short stroke with low impact velocity. At final driving, operate pile hammer in accordance with manufacturer's recommendation for driving either end bearing piles or friction piles. At final driving, operate diesel powered hammers at rate recommended by manufacturer for hard driving. Maintain pressure at steam or air hammer so that: (1) for double-acting hammer, the number of blows per minute during and at completion of driving of a pile is equal approximately to that at which hammer is rated; (2) for single-acting hammer, there is a full upward stroke of the ram; and (3) for differential type hammer, there is a slight rise of hammer base during each upward stroke.

3.1.3 Driving Helmets and Cushion Blocks

3.1.3.1 Driving Helmets or Caps and Pile Cushions

Use a steel driving helmet or cap including a pile cushion between top of pile and driving helmet or cap to prevent impact damage to pile. Use a driving helmet or cap and pile cushion combination capable of protecting pile head, minimizing energy absorption and dissipation, and transmitting hammer energy uniformly over top of pile. Provide driving helmet or cap

that fits sufficiently loose around top of pile so that pile may be free to rotate without binding within driving helmet. During test pile installation, demonstrate to satisfaction of Owner's Representative that equipment to be used on project performs specified function. Use pile cushion of solid wood or of laminated construction using plywood, softwood or hardwood boards with grain parallel to end of pile. Provide pile cushion with thickness of 3 inches minimum and the thickness shall be increased so as to be suitable for the size and length of pile, character of the sub-surface material to be encountered, hammer characteristics, and the required driving resistance. Replace pile cushion at the start of driving of each pile and when it becomes highly compressed, charred or burned, or has become spongy or deteriorated in any manner. Show details of driving helmets, capblocks, and pile cushions. Submit 2 weeks prior to pile installation.

3.1.3.2 Hammer Cushion or Capblock

Use a hammer cushion or capblock between driving helmet or cap and hammer ram consisting of aluminum and micarta (or equal) discs stacked alternately in a steel housing or a suitable polymer designed for this specific purpose as indicated by the hammer manufacturer. Use steel plates at top and bottom of capblock. Replace aluminum, micarta or polymer discs that have become damaged, split or deteriorated in any manner.

3.2 PRELIMINARY WORK

3.2.1 Erection Procedure

Submit an Erection Procedure that identifies methods to avoid damage to piles during handling, placing pile in leads, and during pile driving operations. Provide a temporary system of rigid structural framing templates, wales, and/or guide structures to ensure that the piling does not laterally move during driving, can rotate within the leads, and is placed and driven to the correct position and alignment. Provide UHMW-PE, rollers, or wood blocking to bear against the pile and hold the pile at the required position and alignment. Provide outer template straps or other restraints to prevent the pile from wandering from the required position and alignment.

Contractor is advised that the existing soils may contribute to lateral pile movement of the installed piles due to the installation of adjacent displacement piles, and that the magnitude of the movement may exceed allowable maximum tolerances. Describe methods to limit movement in the Erection Procedure, including but not limited to identifying a driving sequence plan. See FHWA-NHI-16-009 Chapter 18 for an example driving sequence plan.

3.2.2 Wave Equation Analysis of Pile Drivability

a. Prior to driving any pile, the Contractor shall submit a pile Wave Equation Analysis, performed by his Geotechnical Consultant, for each size pile and distinct subsurface profile condition. These analyses shall take into account the proposed hammer assembly, pile cap block and cushion characteristics, the pile properties and estimated lengths and the soil properties anticipated to be encountered throughout the installed pile length based on static capacity analysis with consideration of driving gain/loss factors. Only one specific model of pile hammer may be used for each pile type and capacity.

b. The Wave Equation Analysis shall demonstrate that the piles will not be damaged during driving, shall indicate that the driving stresses will be maintained within the limits below, shall indicate the blow count necessary to achieve the required ultimate static pile capacities, and shall demonstrate the proposed hammer can develop the full nominal pile resistance at a driving resistance of less than 120 blows per foot (10 blows per inch). A larger hammer may be used for restriking as needed to meet the above criteria.

Allowable Driving Stresses

Concrete

Compression - 0.85f'c minus UPL
Tension - (3 times (the square root of f'c)) plus UPL

f'c is compressive strength of concrete
UPL = Unit Prestress after Losses
(Obtain values from pile manufacturer)

c. Upon completion of the ~~dynamic and static testing~~test pile programs~~ outlined in this specification section~~, a refined Wave Equation Analysis shall be performed taking into consideration the evaluated capacities, gain/loss factors and ~~recommended~~ production pile lengths. Production pile driving criteria shall be developed based on the results of the refined Wave Equation Evaluations.

d. All pile driving equipment furnished by the Contractor shall be subject to the approval of the Contractor's Geotechnical Consultant. Complete the attached pile and driving equipment data form, including hammer information, in full as part of the submittal of the results of the Wave Equation Analyses.

e. The cost of performing the Wave Equation Analyses shall be paid for by the Contractor and included in the base bid.

3.2.3 Order List

The Contractor shall submit to the Owner's Representative for approval, an itemized list for piles prior to placing the order with the supplier. The list shall indicate the pile lengths required at each location as shown on the plans and the corresponding ordered length of each pile.

3.2.4 Pile Length Markings

The Contractor shall mark each pile prior to driving with horizontal lines at one foot intervals, and the number of feet from pile tip at 5 foot intervals.

3.3 PILE DRIVING

3.3.1 General

Notify Owner's Representative 10 days prior to driving of test piles and load test. Piles may be driven when the specified 28-day concrete strength has been achieved but not less than 7 days after casting. Drive piles to indicated tip elevation to reach a driving resistance established by the wave equation analyses (WEAP) in accordance with the schedule which the will prepare from the test-pile driving data. During initial driving and

until pile tip has penetrated beyond layers of very soft soil or below bottom of predrilled holes, use a reduced driving energy of the hammer as required to prevent pile damage. Refusal criteria shall be established by the Owner's Representative. If a pile fails to reach indicated tip elevation, notify Owner's Representative and perform corrective measures as directed. Provide hearing protection when noise levels exceed 140 dB. Piles or pile sections shall not be handled or moved in any manner that would result in cracking or permanent damage to the concrete or to the grout surrounding the prestressing cables. Piles may be driven without pile guides or leads providing a hammer guide frame is used to keep the pile and hammer in alignment.

High driving resistance or refusal may occur during installation of piles through medium dense to dense coarse grain layer that was encountered in several borings approximately between EL -30 and EL -80. Monitor and adjust hammer energy to avoid pile damage and misalignments. Spudding at the pile locations may be needed to reduce the potential for damage to the piles.

Drive production piles in accordance with the approved driving criteria, erection procedure, and installation procedures. Drive piles with the same hammer, cushion, or cap block, and use the same operating conditions as the indicator piles. If a pile fails to reach the tip elevation or if the required driving resistance is reached before the pile tip elevation, notify the Engineer.

If upon reaching the required tip elevation and the pile has not attained the specified penetration resistance, stop driving. After a period of at least 48 hours, restrike the pile with or without performing dynamic analysis, as directed by the Engineer. If the pile has still not attained the specified bearing capacity, then the Engineer will identify the corrective measures including but not limited to driving additional piles.

If an obstruction is encountered during driving, record the elevation, extract the pile and verify the depth and lateral extent of the obstruction by probing. The Engineer will determine whether the obstruction should be removed, the pile offset, or additional piles driven.

After driving piles and before installing the concrete cap beams, support the piles at the cut off elevation. The support shall limit the maximum deflection at cutoff elevation to 4 inches due to pile design forces developed by a 3.5 ft wave with a 3.2 sec period, and a 1 knot current.

3.3.2 Tolerances in Driving

Drive piles with a variation of not more than 2 percent from vertical for plumb piles or more than 4 percent from required angle for batter piles. Maintain and check axial alignment of pile and leads at all times. If subsurface conditions cause pile drifting beyond allowable axial alignment tolerance, notify Owner's Representative and perform corrective measures as directed. Place butts within 4 inches of location indicated. Manipulation of piles within specified tolerances will not be permitted. In addition to specified tolerances, maintain a location to provide a clear distance of at least 6 inches from butt to edge of pile cap. If clear distance can not be maintained, then notify Owner's Representative. Check each pile for heave. Redrive heaved piles to required point elevation.

3.3.3 Protection of Piles

Square the heads and tips of piles to the driving axis. Laterally support

piles during driving, but do not unduly restrain piles from rotation in the leads. Carefully support battered piles so the resulting bending stresses under the driving forces do not exceed the manufacturers stated capacities. Maintain axial alignment of pile hammer with that of the pile. If a pile head has projecting strands or mild steel reinforcement, use a special driving head to prevent direct impact forces from being transmitted through the reinforcement.

3.3.4 Predrilling of Piles

Predrilling to reduce pile driving vibrations will be permitted. The diameter of pre-drilled holes shall not exceed 80% of the pile width unless approved otherwise by the Engineer. Predrill only to the depth needed to reduce pile driving vibrations to an acceptable level. The depth of predrilled holes shall not exceed an elevation 10 feet above the anticipated tip elevation unless approved otherwise by the Engineer.

3.3.5 Build-Ups

Where required, a pile section may be extended to cut off elevation by means of a cast in place reinforced concrete build up constructed as indicated on the Contract Drawing. In no case shall the length of the build up exceed 2 feet. Submit details showing the means of protecting the joints by mortar or epoxy to the Engineer for approval. Where build ups are exposed to water, protect the cast in place section from the water during curing. Concrete in build up shall have a minimum 28-day compressive strength of 7,000 psi. Build ups will not be permitted on more than 10% of the total number of piles.

3.3.6 Pile Cut-Off

Cut-off piles with a smooth level cut using pneumatic tools, sawing, or other suitable methods approved by Owner's Representative. Use of explosives for cutting is not permitted. Cut-off sections of piles must be removed from the site upon completion of the work.

3.3.7 Splices

Make splices as indicated. Splices shall be capable of developing the full strength of the member in compression, tension, shear, and bending. Detail drawings of splices and design calculations demonstrating the strength of the splice shall be submitted for approval.

3.3.8 Jetting of Piles

Jetting will not be permitted.

3.3.9 Rejected Piles

Piles damaged or impaired for use during handling or driving, mislocated, or driven out of alignment beyond the maximum tolerance shall be withdrawn and replaced by new piles or shall be cut-off and abandoned and new piles driven as directed. Excess cut-off from piles and unacceptable piles shall be removed from the work site. All work in connection with withdrawing and removing rejected piles from the site shall be done at no additional cost to the Owner.

3.4 FIELD QUALITY CONTROL

3.4.1 ~~Test Piles~~Pile Testing

~~Use test piles of type and drive as specified for piling elsewhere in this section. To account for subsurface variations, use sufficiently long test piles that would permit the piles to be driven to at least 15 feet below the estimated tip elevations if needed. Drive test piles in vicinity of soil boring test holes Nos. LB-101, LB-107, WB-101, and WB-103; at cone penetrometer locations CPT-101a and CPT-105a; and at other locations as indicated on the drawings. Drive test piles to within 5 feet of the indicated tip elevation. A pile dynamic analyzer shall be provided and operated as specified in paragraph DYNAMIC PILE ANALYSIS during the driving of each test pile~~Provide test pile in accordance with Section 31 09 16.23 - DRIVEN PILE LOAD TESTS.~~—~~ Modify driving as required based upon recommendation of Contractor's Geotechnical Consultant and approval of the Owner's Representative.

~~3.4.2 Dynamic Pile Analysis~~

~~The purpose of dynamic testing is to provide supplemental information for evaluating pile hammer performance, driving stresses, and bearing capacities. Dynamic testing shall be conducted during the entire time piles are initially driven or redriven and during pile restrike testing. Use test piles of type as specified elsewhere in this section. Equipment to obtain dynamic measurements, record, reduce and display its data shall be furnished and meet the requirement of ASTM D4945. The equipment shall have been calibrated within 12 months thereafter throughout the contract duration. Drive test piles at the locations indicated. The contractor shall employ an independent inspection firm, hereinafter referred to as the "Contractor's Geotechnical Consultant", experienced in the pile driving process, monitoring of test pile installation, and in the use of the Pile Driving Analyzer and its related equipment. Dynamic pile analysis shall be performed as follows:~~

~~a. Each dynamic pile analysis shall be performed in two steps. The first step is to check the hammer, pile and soil performance, and to determine the suitability of the proposed hammer for the size, length and type of pile being installed for the soil types encountered as the piles are driven. This initial monitoring shall determine the efficiency of the hammer relative to specified efficiency, effectiveness of cushion, level of compressive and tensile stress in pile and extent/location of any pile damage caused by the initial driving. With each blow of the pile the information listed below shall be electronically recorded and analyzed by the Pile Driving Analyzer:~~

~~(1) Blow number~~

~~(2) Blow rate per minute and/or stroke.~~

~~(3) Input and reflected values of force and velocity.~~

~~(4) Value of upward and downward traveling force wave with time.~~

~~(5) Maximum and final transferred energy to pile, hammer system efficiency.~~

~~(6) Maximum compressive stress, velocity, acceleration and displacement.~~

~~(7) Maximum tensile stress in pile.~~

~~(8) Pile structural integrity, damage detection, extent and location.~~

~~(9) Bearing capacity of pile by Case method.~~

~~If the pile, hammer and soil performance evaluation recommends changes to the hammer stroke, pile cushioning, augering or any other aspect for the pile driving operation these changes shall be incorporated into production pile driving in an effort to control excessive stresses and pile damage. Test piles damaged or broken during installation shall be replaced, incorporating driving modifications as determined by the Contractor's Geotechnical Consultant and reviewed and approved by the Owner's Representative. This procedure shall be repeated until allowable tensile and compressive stresses are achieved in the pile and/or pile damage is minimized. Selected initial driving records shall be subjected to rigorous computer analysis by the Case Pile Wave Analysis Program (CAPWAP) for determination of resistance distribution, soil resistance and properties, and estimation of anticipated gain/loss factors.~~

~~b. Upon completion of test pile driving the piles shall be allowed to set-up for at least 72 hours. After evaluation of pile, hammer and soil performance by the Contractor's Geotechnical Consultant, the second step of the dynamic pile analysis may proceed. This portion of the evaluation requires striking the set-up piles a minimum of 20-50 times, or as directed by the Contractor's Geotechnical Consultant using the same hammer which was used for the test pile driving and which will be used for production pile driving. The hammer shall be "warmed up" and in optimal readiness prior to restriking, in order to avoid capacity losses during evaluation of restrike data. Maximum hammer energy shall be applied during restrike in order to fully mobilize the soil resistance. However, care should be exercised as to not overstress the pile. In addition to those items listed above, selected restrike driving records (as directed by the Contractor's Geotechnical Consultant are to be subjected to rigorous computer analysis by the Case Pile Wave Analysis Program (CAPWAP) for determination of resistance distribution, soil resistance and properties, plot of applied load vs. average pile displacement based on the calculated soil properties, and to establish pile driving criteria for the production piles.~~

~~c. Performance Report:~~

~~(1) Upon satisfactory completion of each dynamic load test a minimum of three copies of a Pile Performance Report shall be submitted for the Contractor by the Contractor's Geotechnical Consultant. The submittal shall be prepared and sealed by a Professional Engineer registered in the State of Texas and shall be made within three working days of the completion of the dynamic load test.~~

~~(2) The report for the Dynamic Pile Analysis shall contain the following information:~~

~~(a) Bearing capacity of pile from Case Pile Wave Analysis Program (CAPWAP). Information resulting from analysis of a selected~~

~~restrike blow.~~

~~(b) Maximum and final transferred energy, hammer system efficiency during pile installation.~~

~~(c) Maximum compressive stress, velocity, acceleration and displacement.~~

~~(d) Maximum tensile stress in pile.~~

~~(e) Pile structural integrity, damage detection, extent and location.~~

~~(f) Blows per minute and blow number.~~

~~(g) Input and reflection values of force and velocity, upward and downward traveling force wave with time.~~

~~(h) Pile skin friction and toe resistance distribution.~~

~~(i) Maximum energy transferred to pile.~~

~~(3) The maximum allowable pile design load will be proposed by the Contractor's Geotechnical Consultant based upon the results of a satisfactory pile load test conducted on a pile driven as specified herein and shall include the effects of load transfer to the soil above the foundation stratum.~~

~~d. The equipment to be used for dynamic testing of the pile hammer and soil performance and for dynamic load testing of the test pile shall be either a model GCPC or a PAK Pile Driving Analyzer as manufactured by Pile Dynamics, Inc., of Cleveland Ohio or approved equivalent.~~

~~e. All services of the Contractor's Geotechnical Consultant shall be paid for by the Contractor. The Contractor's Geotechnical Consultant shall be available throughout the pile driving operation to consult with the Owner's Representative when required by the Owner's Representative. The cost of changes in the Contractor's procedure, as required by evaluation of the results of the Pile Driving Analysis, shall be at the Contractor's expense.~~

3.4.2 Pile Records

Keep a complete and accurate record of each pile driven. Indicate the pile location, deviations from pile location, cross section shape and dimensions, original length, ground elevation, tip elevation, cut-off elevations, batter alignment, number of blows required for each foot of penetration and number of blows for the last 6 inches penetration or fraction thereof as required for the "calculated" driving resistance. Include in the record the beginning and ending times of each operation during driving of pile, type and size of hammer used, rate of operation, stroke or equivalent stroke for diesel hammer, type of driving helmet, and type and dimension of hammer cushion (capblock) and pile cushion used. Record re-strike data and unusual occurrences during pile driving such as redriving, heaving, weaving, obstructions, and any driving interruptions.

-- End of Section --

SECTION 31 63 13.00

RIGID INCLUSIONS
06/20

PART 1 GENERAL

Subject to the General and Supplementary Conditions, this section includes the supply of all labor, equipment, materials, and incidentals required to complete the Rigid Inclusion soil improvements for the Berth 6 Construction project. The term "Rigid Inclusions (RIs)" as used in these specifications is intended as a generic term and refers to a cementitious column installed in any type of ground to provide ground improvement and control of settlements resulting from loads from fill, backland pavement, surcharge loads, and live loads. RIs may include Controlled Modulus Column (CMC), Auger Pressure Displacement Piles (APGD), Rigid Inclusions (RI), GeoConcrete Columns (GCC), or Omega Rotary Torque Displacement Pile (ORTD), etc.

1.1 REFERENCES

The publications listed below form a part of this specification to the extent referenced. The publications are referred to within the text by the basic designation only.

AMERICAN CONCRETE INSTITUTE (ACI)

ACI 305.1	(2014) Specification for Hot Weather Concreting

ASTM INTERNATIONAL (ASTM)

ASTM A615/A615M	(2016) Standard Specification for Deformed and Plain Carbon-Steel Bars for Concrete Reinforcement
ASTM C1017/C1017M	(2013; E 2015) Standard Specification for Chemical Admixtures for Use in Producing Flowing Concrete
ASTM C109/C109M	(2016a) Standard Test Method for Compressive Strength of Hydraulic Cement Mortars (Using 2-in. or (50-mm) Cube Specimens)
ASTM C150/C150M	(2018) Standard Specification for Portland Cement
ASTM C33/C33M	(2018) Standard Specification for Concrete Aggregates
ASTM C39/C39M	(2018) Standard Test Method for Compressive Strength of Cylindrical Concrete Specimens
ASTM C494/C494M	(2017) Standard Specification for Chemical Admixtures for Concrete

ASTM C618	(2019) Standard Specification for Coal Fly Ash and Raw or Calcined Natural Pozzolan for Use in Concrete
ASTM C937	(2016) Grout Fluidifier for Preplaced-Aggregate Concrete
ASTM C94/C94M	(2018) Standard Specification for Ready-Mixed Concrete
ASTM C942	(2010) Compressive Strength of Grouts for Preplaced-Aggregate Concrete in the Laboratory
ASTM D1143/D1143M	(2007; R 2013) Piles Under Static Axial Compressive Load
ASTM D5882	(2016) Standard Test Method for Low Strain Impact Integrity Testing of Deep Foundations

U.S. FEDERAL HIGHWAY ADMINISTRATION (FHWA)

FHWA NHI-16-028	(2017 Ground Modifications Methods Reference Manual

INTERNATIONAL ORGANIZATION FOR STANDARDIZATION (ISO)

ISO/IEC 17025	(2017) General Requirements for the Competence of Testing and Calibration Laboratories

1.2 SUBMITTALS

Contractor shall provide submittals in conformance with the requirements of the General and Supplementary Conditions, and in accordance with Section 01 33 00 SUBMITTAL PROCEDURES. Submit the following:

SD-01 Preconstruction Submittals

Work Plan

Alternative Design Package

Qualifications

Quality Control Plan

SD-02 Shop Drawings

Rigid Inclusions

SD-03 Product Data

Steel Reinforcement

Concrete Materials

SD-05 Design Data

Concrete Mixtures

Grout Mixtures

SD-06 Test Reports

Grout Mixtures

Static RI Load Test Reports

Submit within three days of completing each test.

RI Inspection Reports

Submit not later than two (2) working days after placing each RI.

Instrumentation monitoring reports

Submit within 3 working days after each monitoring event.

Select Fills

Strength Test

SD-07 Certificates

Drilling And Pumping Equipment

SD-11 Closeout Submittals

Record Drawings

Certified RI Survey

1.3 DEFINITIONS

A. Control RI. RIs installed to demonstrate Installer's construction methods, equipment, standards of workmanship, and tolerances. For each additional different rig brought to the site, additional Control RIs shall be installed to assess the rig's capabilities.

B. Working Pad: The working pad shall consist of compacted select fill that is placed above the existing ground surface after the top soil is removed. The purpose of the working pad is to provide a stable bearing material for the RI installation. Submit select fills for approval.

C. Load Transfer Platform (LTP): LTP will be constructed at the top of the RIs. LTP shall consist of compacted granular fill with layers of high strength geogrid reinforcement as shown on the plans. The purpose of the pad is to transfer the majority of the loads from fill, backland pavement, surcharge loads, and live loads to the RIs, thereby providing adequate support above and between the rigid inclusions. Uncontaminated portions of Working Pad may be incorporated into the bottom LTP layer, below the bottom geogrid layer.

D. Inclinometer: Inclinometers are geotechnical instrumentation used to monitor the magnitude and depth of horizontal deformation.

Inclinometers shall consist of standard inclinometer casings installed and grouted within vertical boreholes in the in-situ soil.

E. Extensometer: Magnetic Extensometers are geotechnical instrumentation used to measure settlement or heave of soft ground under the influence of fill. The measurements are taken using a probe that is lowered inside a telescoping guide tube to detect and measure the position of magnetic anchors located around the guide tube at various depths along the borehole or within the fill. "Spider" anchors are used in boreholes. Multipoint Borehole Extensometers may also be used. Magnetic Extensometers shall have at least 6 monitoring points and may be combined with the inclinometer system.

1.4 DESIGN REQUIREMENTS

A. The Contractor is responsible for the installation of the Rigid Inclusions as shown on the plans.

B. If the Contractor wants to use a different RI type, size or arrangement, then it is the Contractor's responsibility to perform the design of the RI. The materials, design, ground improvement and settlement criteria, load testing, and acceptance shall be in accordance with FHWA NHI-16-028 and these specifications. A professional engineer registered in the State of Texas shall perform the design of the RIs.

1. RIs shall be a vertical cementitious columns used for ground improvement and settlement control, ~~installed to a minimum tip elevation of EL-70, into the Beaumont Formation~~installed to a minimum embedment of 10-ft into Beaumont Formation, or a minimum tip elevation of EL-70, whichever is deeper. The Contractor is responsible for determining drilling methods and for designing the RIs.

2. The Contractor shall submit an alternative design package for the design that includes drawings, design assumptions, calculations, and other information in sufficient detail to verify the proposed design and construction. The submittal shall be prepared and certified by a registered Professional Engineer with proven experience in design of RI components.

3. The Engineer will review and if found to be acceptable, approve the Contractor's submittal. Approval of the Contractor's submittals will not relieve the Contractor of responsibility for unsatisfactory performance of the installed RIs. All design computations shall be furnished at least 30 calendar days prior to the proposed commencement of drilling. The complete submittal, including design computations, fabrication and installation drawings and installation plan, shall be certified by a registered Professional Engineer and shall be submitted for approval.

4. RI Design
Design the RIs to meet the following criteria:
a. RI Ground Improvement Area - as shown on the drawings.
b. Center to Center RI Spacing - 7.0 feet maximum on a square grid pattern, except for the three rows in front of the bulkhead and anchor wall, which shall have a 6.0-foot maximum spacing (perpendicular to the bulkhead).
c. Minimum Diameter - 14 inches, widened to 30~~24~~ inches at the

top for bearing.
d. Minimum Axial Compressive Design Load Capacity = 115 kips
e. Bearing Stratum - Beaumont Formation.
f. Minimum Tip Embedment - 10 feet into the Beaumont Formation.
g. Minimum of one #5 steel reinforcing bar from top of RI to a minimum elevation of EL-27, with the exception of the three rows in front of the anchor wall and bulkhead, which shall have one #8 reinforcing bar from top of RI to a minimum elevation of EL-27.
h. Minimum 28-day concrete or grout compressive strength of 3,000 psi.
i. The total (immediate and long-term) settlement at any point on the backland pavement surface shall not exceed 5 inches over a 30-year period.
j. Minimum Global Stability Factor of Safety of 1.5 of the bulkhead system with ground improvement.
k. A load transfer platform with a minimum thickness of 40 inches and a minimum of three layers of STrataGrid SG200 geosynthetic reinforcement, or approved equivalent.
l. Rigid inclusions ~~shall~~may be installed by displacement method or non-displacement method.

All costs associated with the Contractors design submittal, incomplete or unacceptable submittals, re-submittals, or review of more than one re-submittals by the Engineer, shall be the responsibility of the Contractor.

1.5 QUALITY ASSURANCE

A. Submit a Quality Control Plan in accordance with section 01 40 00.00 QUALITY REQUIREMENTS. The plan shall include a written of the following Quality Control specifics, at a minimum:

QC Personnel
Prep & coordination of RI installation
RI materials including mixing and delivery
RI installation
Testing and inspections
Mitigation plans including obstructions encountered

B. Testing Agency Qualifications: Qualified according to ASTM C1077, ASTM D3740, and ASTM E329 for testing indicated and accredited by IAS or ILAC Mutual Recognition Arrangement as complying with ISO/IEC 17025.

C. Mix Designs: For each type of grout and/or concrete. Include description of type and proportions of ingredients.

D. Welding Qualifications: Qualify procedures and personnel according to the following:

1. AWS D1.1/D1.1M, "Structural Welding Code - Steel."
2. AWS D1.4/D1.4M, "Structural Welding Code - Reinforcing Steel."

1.6 PRECONSTRUCTION TESTING

A. Control RIs: Construct four Control RIs at locations near each location of boring LB-101, LB-103, LB-105, and LB-108 as indicated in the geotechnical report, to demonstrate Installer's construction methods, equipment, standards of workmanship, and tolerances.

1. If The Engineer determines that a Control RI does not comply with requirements, excavate for and construct another until it is accepted.

2. Control RI Records: Prepare records for each Control RI, compiled and attested to by a qualified professional engineer. Include same data as required for permanent RIs.

3. Control RIs that comply with requirements, including location tolerances, may be used as production RIs on Project.

B. Static RI Load Test: Arrange and perform one static load test on an acceptable Control RI near boring location LB-105. Submit Static RI Load Test Reports. Perform the following static load test(s):

Axial Compressive Static Load Test: ASTM D1143/D1143M, Procedure A, and the following procedures:

a. Equip the static load test RI with a minimum of 3 vibrating wire strain gauges for measuring strain in the RI during load test.

b. Approval Criteria: Allowable load shall be the load acting on the load test RI when the lesser of the following criteria are met, divided by a factor of safety of 2:

i) Net settlement after rebound of not more than 0.003 inch/kip of test load.

ii) Total settlement of 2 inch provided the load settlement curve shows no sign of failure.

iii) A plunging failure or sharp break in the load settlement curve.

c. The allowable load shall be greater than the design load capacity stated in Section 1.2.

C. Low-Strain Pile Integrity Testing (PIT): Performed and reported according to ASTM D5882 on Control RIs and static load test RIs.

1.7 FIELD CONDITIONS

A. Preinstallation Conference: A preinstallation conference will be scheduled by the Engineer and held prior to the start of the RI installation at the Project Site. The Engineer, prime Contractor, and RI specialty Contractor shall attend the meeting. The excavation Contractor, erosion control Contractor and survey Contractor, if different than the prime or RI specialty Contractor, shall also attend. Attendance is mandatory.

B. Protect structures, underground utilities, and other construction from damage caused by RI excavation and installation.

C. Site Information: A geotechnical report has been prepared for this Project and is included elsewhere in the Project Manual for information only.

D. Survey Work (Pre-Installation): Engage a qualified land surveyor or professional engineer to perform surveys, layouts, and measurements

for rigid inclusions. Before excavating, lay out each RI to lines and levels required.

E. Survey Work (Post-Installation): Record actual measurements of each Rigid Inclusion's location, diameter, bottom and top elevations, deviations from specified tolerances, and other specified data.

1. Record and maintain information pertinent to each RI and indicate on record Drawings. Cooperate with Owner's testing and inspecting agency to provide data for required reports.

1.8 QUALIFICATIONS

A. Submit documentation that the Contractor meets the following qualifications.

1. The Contractor constructing the RIs shall have a minimum 5 years experience installing geosynthetic reinforcement and RI type submitted in the Contractor's bid proposal.

2. The Contractor shall provide documentation for three recent, successful projects completed with similar site conditions and improvement criteria. The Contractor shall provide names and contact information of individuals who can attest to the adequacy of the work performed. This information shall be submitted in the Contractor's bid proposal.

3. The Contractor must assign a Project Manager who has been responsible for the RI work on at least three (3) projects. The Project Manager shall have been in full-time employment of the Contractor for at least two of those projects (provide a list of projects and dates in bid proposal). If Contractors design, the RI shall be designed by a Professional Engineer licensed in the State of Texas with experience in the design of at least three successfully completed RI projects over the past five years. The Design Engineer may be either an employee of the Contractor or a separate Consultant Design Engineer meeting the stated experience requirements.

4. The Contractor must assign a full-time Project Superintendent with at least three (3) years experience in RI construction and who has been responsible for a minimum of three (3) RI projects (provide a list of projects and dates in bid proposal).

5. All personnel listed and submitted above shall be actively involved in the project. Written requests for substitution of these key personnel must be submitted prior to personnel changes. Documentation must be submitted to the Owner that demonstrates that the substitute meets the requirements listed above. Substitution may not be made until written approval is provided by the Owner.

1.9 WORK PLAN

Upon approval of the RI Contractor's qualifications, submit a work plan to the Engineer for review and approval at least 15 calendar days prior to starting the work. The work plan shall include at a minimum:

A. The proposed start date.
B. Measures to protect the existing structures; information on space requirements for installation equipment; temporary access routes; information on provisions for working in the proximity of underground facilities or utilities.
C. Proposed RI construction methods and equipment including drill-hole diameter and depths including:
1. Type and make of drilling rig, weight, rated capacity, and boom lengths.
2. Torque of drilling machine and horsepower of hydraulic power unit.
3. Pressure and discharge capacity of grout pump.
4. Automated monitoring equipment to be used.
D. RI concrete or grout mix design including:
1. Type of Portland cement.
2. Aggregate source and gradation.
3. Proportions of mix by weight and water-cement ratio.
4. Manufacturer, brand name and technical literature for proposed admixtures.
5. Compressive strength test results (per AASHTO T106/ASTM C109) supplied by a qualified independent testing lab verifying the specified minimum 7 and 28-day grout compressive strengths. Previous test results for the proposed grout mix completed within one year of the start of grouting may be submitted for initial verification and acceptance of the required compressive strengths and start of production work.
E. Proposed RI grout placement procedures and equipment.
F. Proposed RI testing methods and equipment setup.
G. Material Certificates: For the following:
1. Steel reinforcing
H. Sequence of construction.
I. Unique RI numbering/identification system.
J. Installation plan for the inclinometers and extensometers, including product data sheets, protection of equipment, monitoring frequency, and reporting format.

1.10 MEASUREMENT AND PAYMENT

No separate payment shall be made for Work under this specification. Payment for Work associated with this specification shall be included in the overall Lump Sum project cost.

PART 2 PRODUCTS

2.1 RIGID INCLUSIONS

Rigid inclusions shall be comprised of a cementitious column, reinforced as necessary to limit deflections to within acceptable ranges. Rigid inclusions shall be designed in accordance with Section 1.4. Submit shop drawings on the rigid inclusion system, including the following:

D. Shop Drawings for RI's, prepared by or under the supervision of a qualified professional engineer.

1. Identify each RI and indicate RI dimensions, cross sections, locations, and sizes.

2. Indicate types and configurations of reinforcement and detail

fabricating.

3. Include method of centralizing reinforcement, type and size of centralizing devices, and locations on reinforcing bars.

4. Static RI Load Tests: Include arrangement of static RI load test reaction frame, test RI and reaction piles, equipment, and instrumentation. Submit structural analysis data signed and sealed by the qualified professional engineer responsible for their preparation. Calibration records load cells, hydraulic jacks, pumps and pressure gauges should be submitted at least 14 days prior to performing the load testing.

2.2 STEEL REINFORCEMENT

A. Single Bar Reinforcing: ASTM A615/A615M.

1. Mechanical Couplings: Screw-on type, capable of supporting the minimum ultimate tensile strength of the coupled bars.

B. Centralizers: Devices to center steel reinforcement in excavation; spaced not more than 15 feet on center for vertical RIs.

2.3 CONCRETE MIXTURES

Prepare design mixtures for each type and strength of concrete, proportioned on the basis of laboratory trial mixture, field test data, or both. Submit for approval. Provide the following for concrete materials:

A. Portland Cement: ASTM C150/C150M, Type I or Type III.

1. Fly Ash: ASTM C618, Class F.

B. Minimum Compressive Strength: 3000 psi at 28 days.

C. Maximum Water-Cementitious Materials Ratio: 0.45.

D. Water: ASTM C94/C94M and potable.

E. Fine Aggregate: ASTM C33/C33M with 100 percent passing a No. 8 sieve, free of materials with deleterious reactivity to alkali in cement. Provide aggregate from single source.

F. Chemical Admixtures: Provide admixtures certified by manufacturer to be compatible with other admixtures. Do not use calcium chloride or admixtures containing calcium chloride.

1. Water-Reducing Admixture: ASTM C494/C494M, Type A.
2. Water-Reducing and Retarding Admixture: ASTM C494/C494M, Type D.
3. High-Range, Water-Reducing and Retarding Admixture: ASTM C494/C494M, Type G.
4. Plasticizing and Retarding Admixture: ASTM C1017/C1017M, Type II.

G. Fluidifier: ASTM C937, with expansion of less than 4 percent.

2.4 RELATED MATERIALS

A. RI-Top Forms: Metal, glass-fiber-reinforced plastic, paper, or fiber tubes. Provide units with enough wall thickness to resist plastic concrete loads without detrimental deformation~~. Diameter same as RI diameter~~.

2.5 GROUT MIXTURES

A. Prepare design mixtures for each type and strength of grout, proportioned on the basis of laboratory trial mixture, field test data, or both. Submit for approval.

1. Use a qualified independent testing agency for preparing and reporting proposed mixture designs based on laboratory trial mixtures.

B. Proportion grout mixture as follows:

1. Minimum Compressive Strength: 3000 psi at 28 days; ASTM C109/C109M with cube specimens restrained from expansion according to ASTM C942.
2. Maximum Water-Cementitious Materials Ratio: 0.45.
3. Grout Flow: 16 to 25 seconds; CRD-C-611-8 using a flow cone with 0.75-inch I.D. opening.

2.6 GROUT MIXING

A. Ready-Mixed Grout: Measure, batch, mix, and deliver according to ASTM C 94/C 94M, and furnish batch ticket information.

1. Temperature Limits: Comply with ACI 305.1 for hot weather and ACI 306.1 for cold weather.

PART 3 EXECUTION

3.1 PREPARATION

A. Inspect the site prior to the start of operations to verify the depth of ground improvements can be constructed using the proposed equipment.

B. Protect structures, utilities, fuel lines, storm drains, bulkheads, and other facilities from damage caused by settlement, lateral movement, and other hazards created by drilling operations.

C. The Contractor shall ensure a firm base on which heavy equipment can be operated safely under its own power.

D. The Contractor shall accurately locate the limits of column installation, the existing fuel line, and backland pavement extents in accordance with the contract plans.

E. The Contractor shall exercise caution to avoid settlement or damage to existing fuel line, culvert pipes and other structures; and settlement, undermining, or instability to the bulkhead system.

F. Stability of all the temporary sheeting and/or temporary slopes, if used to facilitate installation of the columns and/or embankment, is

the responsibility of the Contractor. The Contractor shall be responsible for any damage caused by his activities at no additional cost to the Owner.

G. The Contractor shall exercise caution and account for the temporary instability that may be caused by ground improvement until the ground improvement features gain strength with time.

3.2 PROTECTION OF EXISTING STRUCTURES

A. The Contractor will be held responsible for any damage to the bulkhead system including the deadman and tierods, underground fuel lines, culverts pipes, or other facilities, caused by him in making the necessary excavation and fills, and installation of the RIs. The Contractor shall repair all such damage at his expense.

3.3 WORKING PAD CONSTRUCTION

A. Prior to construction of the working pad, topsoil and other unsuitable materials shall be removed.

B. Evaluate the site and subsurface conditions and assess any need for working platforms. Such platforms, preparatory work, and material needed is considered part of the means and methods and no additional payment or time will be granted toward such work.

C. Any rutting of the working pad that occurs during installation of the RIs shall be stabilized. If practical, when rutting occurs, reroute construction traffic to avoid further damage to the underlying in-situ soils, or remove and replace the rutted material with select fill or Flexible Base Course aggregate.

3.4 DRILLING AND PUMPING EQUIPMENT

The contractor shall provide a certification that states that no techniques that cause ground vibrations that can damage the existing structures, including the underground fuel line, are used in the installation.

A. Drilling Rig: Provide RI rigs capable constructing the RIs with the design diameters and to the required depths plus 10 percent greater than design depths.

B. Provide adequate number of RI rigs to meet the project schedule considering all facets of the project.

C. Grout Pump: Positive-displacement pump with a known volume per stroke.

D. Automated Monitoring Equipment: Capable of measuring auger depth, RPM, penetration rate, and grout volume pumped per unit depth increment and generating data for printed results.

3.5 EXCAVATION

A. Excavate RIs to elevations indicated. Establish and maintain axial alignment of leads and RI auger before and during drilling.

B. Drilling Tolerances:

1. Surveying: Prior to installation of the RIs, each RI location shall be surveyed by a licensed surveyor. Provide all survey layouts, maintain utility clearances and provide any required coordination with the Engineer and any other local, state, and federal agencies having jurisdiction, prior to the start of construction. The location of each RI shall be marked using a unique numbered flag or stake.

2. Plan position: The center of the completed RI shall be within 3 inches of the plan location.

3. Verticality: The axis of the completed RI shall not deviate more than 2% from vertical. The verticality of the mast of the rig shall be checked by the operator before start of the installation for each RI. The operator shall indicate on the daily drilling log for each RI that verticality was within tolerance by checking the appropriate box on the installation log.

4. Diameter: The completed RI diameter shall not deviate more than 10% from the plan diameter.

5. Installation Sequence: Install the RIs in accordance with the sequence detailed in the approved work plan. If adjacent RIs are observed to be influenced by the installation of a neighboring RI, the installation sequence shall be modified to prevent disturbance of already constructed RI. Any required modifications to the sequence, or mitigation of RIs deemed unusable due to disturbance, shall be completed at no additional cost or extension in the project schedule.

6. Depth: Install the RIs to the minimum tip elevation, or deeper as required to found the RIs on a suitable bearing stratum, as determined by the Engineer.

7. Single Bar Reinforcing: Install in the center of the RI to the required depth. Provide support for the reinforcing bar to prevent settlement into the grout or cement.

8. Cut-off Elevation: Cutoff the RIs within 6 to 12 inches below the top elevation of the working pad, or slightly higher to allow any required trimming or removal of low strength material at the top of the RI.

3.6 FIELD QUALITY CONTROL

A. Special Inspections: ~~Owner will~~Contractor shall engage a qualified special inspector to perform the following special inspections:

1. RI excavation, placement, and testing.

B. Concrete and/or Grout Tests. Conduct strength testing of the concrete in accordance with ASTM C39/C39M and grout in accordance with ASTM C 109. For concrete testing, cured cylinders measuring 3 inches in diameter by 6 inches high are required. For testing grout, 2- inch cubes are used. For the cylinders and molds, molds and a curing environment conforming to the requirements of ASTM C39/C39M should be provided. At a minimum, prepare a set of six test cylinders or cubes for each 50 cubic yards of concrete or grout placed or a minimum of two sets of six cylinders or cubes per day (whichever is greater). Two

cylinders or cubes from each set shall be tested for strength at 3, 7, and 28 days. Certified strength test results should be provided to the Engineer for acceptance.

C. Additional Tests: Testing and inspecting agency to make additional tests of grout if test results indicate that compressive strengths or other requirements have not been met, as directed by the Engineer.

D. Correct deficiencies in the Work that test reports and inspections indicate do not comply with the Contract Documents.

E. Low-Strain Pile Integrity Testing (PIT): Performed and reported according to ASTM D5882 on Control RIs, static load test RIs and 3 percent of production RIs, and reported for each RI. The PIT submittal shall include:

a. A record of each RIs tested.
b. Low-Strain Dynamic Testing (LSDT) Report: In accordance with referenced standard for test performed.
c. Submit report to the Engineer within five days of test completion.
d. Installation Record.
e. RI Length.
f. Unusual occurrence(s) during installation.
g. A report with complete interpretation of PIT results.

F. RI Inspection Reports: Prepare inspection reports for each RI with the minimum information as follows:

1. RI location.
2. RI diameter.
3. Actual top and bottom elevations.
4. Final top centerline location and deviations from requirements.
5. Variation from plumb.
6. Date and time of starting and completing.
7. Position and condition of reinforcing steel and splices or mechanical couplings.
8. Automatic monitoring equipment record including cement or grout volume actually pumped.
9. Grout testing results.
10. Remarks, unusual conditions encountered, and deviations from requirements.

G. Certified RI Survey: Prepared by a qualified land surveyor or professional engineer showing final location of RIs in relation to the property survey and existing benchmarks.

1. Notify Engineer when deviations from locations exceed allowable tolerances.

H. RIs will be considered defective if they do not pass tests and inspections, or if, in the sole opinion of the Engineer, installation reports demonstrate deviations in installation procedures that may influence their performance.

I. Geotechnical Monitoring: Perform monitoring of inclinometers and extensometers at least three times between their installation and the

commencement of construction to establish a repeatable baseline of data. Baseline data shall be approved by the Engineer prior to commencing production RI installation. Monitor the inclinometers and extensometers at least weekly after construction has begun. Continue measurements at least 60 days after completion of the fill operations. Provide Instrumentation monitoring reports of measurements within 72 hours of measurement to the Owner's Engineer for review.

A minimum of four inclinometers and four extensometers are recommended. One pair of inclinometer and extensometer shall be installed adjacent to CPT boring location CPT-108. Second pair of inclinometer and extensometer shall be installed near test boring LB-106 behind the bulkhead. The other two pairs of inclinometers and extensometers shall be installed near test borings LB-103 and LB-104. The inclinometers and extensometers shall be installed to a minimum elevation of EL -95. The inclinometers and extensometers shall be installed before any excavation or fill placement. The inclinometers shall consist of standard inclinometer casings installed and grouted within vertical boreholes. The extensometers shall consist of magnetic extensometer geotechnical instrumentation used to measure settlement or heave of soft ground under the influence of fill. A minimum of six magnetic “Spider” anchors shall be located around the guide tube at elevations of EL 4, EL -10, EL-30, EL-55, EL -70, and EL-80. Multipoint Borehole Extensometers may also be used. Magnetic Extensometers may be combined with the inclinometer system.

3.7 PROTECTION

A. Protecting RIs: Protect the tops of the RIs from traffic, freezing, and impact.

B. Protect the inclinometers and extensometers from damage. Any damaged instrument shall be replaced at no additional cost to the owner.

3.8 DISPOSAL OF SURPLUS AND WASTE MATERIALS

A. Disposal: Remove surplus satisfactory soil and waste material, including unsatisfactory soil, drilling spoils, waste grout, trash, and debris, and legally dispose of it off Owner's property.

-- End of Section --

SECTION 33 11 13.01

WATER MAINS
06/20

PART 1 GENERAL

1.1 SECTION INCLUDES

Subject to the General and Supplementary Conditions, this section includes the supply of all labor, equipment, materials, and incidentals for the installation of potable water mains.

1.2 REFERENCES

The publications listed below form a part of this specification to the extent referenced. The publications are referred to within the text by the basic designation only.

AMERICAN NATIONAL STANDARDS INSTITUTE (ANSI)

ANSI/NSF 14	(2019) Plastics Piping System Components And Related Materials
ANSI/NSF 61	(2017) Drinking Water System Components - Health Affects

AMERICAN SOCIETY OF MECHANICAL ENGINEERS (ASME)

ASME B16.1	(2015) Gray Iron Pipe Flanges and Flanged Fittings Classes 25, 125, and 250
ASME B16.39	(2020) Standard for Malleable Iron Threaded Pipe Unions; Classes 150, 250, and 300
ASME B16.4	(2016) Standard for Gray Iron Threaded Fittings; Classes 125 and 250

AMERICAN SOCIETY OF SANITARY ENGINEERING (ASSE)

ASSE 1079	(2012) Performance Requirements for Dielectric Pipe Unions

ASTM INTERNATIONAL (ASTM)

ASTM A106/A106M	(2019a) Standard Specification for Seamless Carbon Steel Pipe for High-Temperature Service
ASTM A47/A47M	(1999; R 2018; E 2018) Standard Specification for Ferritic Malleable Iron Castings
ASTM A53/A53M	(2018) Standard Specification for Pipe, Steel, Black and Hot-Dipped, Zinc-Coated, Welded and Seamless

ASTM A536	(1984; R 2014) Standard Specification for Ductile Iron Castings
ASTM A733	(2016) Standard Specification for Welded and Seamless Carbon Steel and Austenitic Stainless Steel Pipe Nipples

AMERICAN WATER WORKS ASSOCIATION (AWWA)

AWWA C207	(2018) Standard for Steel Pipe Flanges for Waterworks Service, Sizes 4 in. through 144 in. (100 mm through 3600 mm)
AWWA C606	(2015) Grooved and Shouldered Joints

1.3 SUBMITTALS

Contractor shall provide submittals in conformance with the requirements of the General and Supplementary Conditions, and in accordance with Section 01 33 00 SUBMITTAL PROCEDURES. Submit the following:

SD-02 Shop Drawings

Other Methods Of Providing Curves And Bends

SD-03 Product Data

Galvanized-Steel Pipe

Galvanized-Steel Pipe Nipples

Galvanized, Gray-Iron Threaded Fittings

Malleable-Iron Unions

Appurtenances For Grooved-End, Galvanized-Steel Pipe

Stainless Steel Flexible Tubing

Dielectric Fittings

SD-06 Test Reports

Joint Testing

SD-11 Closeout Submittals

Piping Installation

Provide record drawings

1.4 RELATED SECTIONS

Drawings and general provisions of the Contract, including General and Supplementary Conditions and other Division 01 Specification Sections, apply to this Section. Other technical specification sections that may relate to this section, include but are not limited to the following:

A. Section 31 23 23.13 - UTILITY BACKFILL MATERIALS

B. Section 31 23 35.00 - EXCAVATION AND BACKFILL FOR UTILITIES
C. Section 33 11 13.05 - WET CONNECTIONS
D. Section 33 11 53.00 - GATE VALVES
E. Section 33 14 00.00 - HYDROSTATIC TESTING OF PIPELINES
F. Section 33 51 40.00 - DISINFECTION OF WATER LINES

1.5 FIELD CONDITIONS

Interruption of Existing Water Service: Do not interrupt water service to facilities occupied by Owner or others unless permitted under the following conditions and then only after arranging to provide temporary water service according to requirements indicated:

1. Notify Owner no fewer than two days in advance of proposed interruption of water service.

2. Do not interrupt water service without Owner's written permission

1.6 MEASUREMENT AND PAYMENT

No separate payment shall be made for Work under this specification. Payment for Work associated with this specification will be included in the overall Lump Sum project cost.

PART 2 PRODUCTS

2.1 PIPE MATERIALS

A. Potable-water piping and components shall comply with ANSI/NSF 14 and ANSI/NSF 61 Annex G.

B. Galvanized-Steel Pipe:

1. ASTM A53/A53M, Type E Grade B, Standard Weight.
2. Include ends matching joining method Carbon Steel.

C. Galvanized-Steel Pipe Nipples: ASTM A733, made of ASTM A53/A53M or ASTM A106/A106M, Standard Weight, seamless steel pipe with threaded ends.

D. Galvanized, Gray-Iron Threaded Fittings: ASME B16.4, Class 125, standard pattern

E. Malleable-Iron Unions:

1. ASME B16.39, Class 150.
2. Hexagonal-stock body.
3. Ball-and-socket, metal-to-metal, bronze seating surface.
4. Threaded ends

F. Flanges: ASME B16.1, Class 125, cast iron.

G. Appurtenances for Grooved-End, Galvanized-Steel Pipe.

1. Fittings for Grooved-End, Galvanized-Steel Pipe: Galvanized, ASTM A47/A47M, malleable-iron casting; ASTM A106/A106M, steel pipe; or ASTM A536, ductile-iron casting; with dimensions matching steel pipe.
2. Fittings for Grooved-End, Galvanized-Steel Pipe:

a. AWWA C606 for steel-pipe dimensions.
b. Ferrous housing sections.
c. EPDM-rubber gaskets suitable for hot and cold water.
d. Bolts and nuts.
e. Minimum Pressure Rating:

i. NPS 8 (DN 200) and Smaller: 600 psig (4137 kPa).
ii. NPS 10 and NPS 12 (DN 250 to DN 300): 400 psig (2758 kPa).
iii. NPS 14 to NPS 24 (DN 350 to DN 600): 250 psig (1725 kPa).

H. Stainless Steel Flexible Tubing

1. ANSI/NSF 61.
2. Provide MetraFlex Superflex SFLX26 or approved equal.

I. Dielectric Fittings

1. General Requirements: Assembly of copper alloy and ferrous materials with separating nonconductive insulating material. Include end connections compatible with pipes to be joined.
2. Dielectric Unions:
a. The Ford Meter Box Company, Inc. or approved equal
3. Standard: ASSE 1079.
4. Pressure Rating: 150 psi.
5. End Connections: Solder-joint copper alloy and threaded ferrous.

J. Water Pipe Insulation: Pipe insulation shall be 3" Owens Corning SSL II with ASJ MAX Fiberglass Pipe Insulation.

PART 3 EXECUTION

3.1 PREPARATION

A. Conform to applicable installation specifications for types of pipe used.

B. Employ workmen who are skilled and experienced in laying pipe of type and joint configuration being furnished. Provide watertight pipe and pipe joints. Lay pipe with bell ends facing in direction of laying.

C. Lay pipe to lines and grades shown on Drawings. Use adequate surveying methods and equipment; employ personnel competent in use of this equipment. Horizontal and vertical deviations from alignment as indicated on Drawings shall not exceed 0.10 feet. Measure and record "Record Drawing" horizontal alignment and vertical grade at maximum of every 50 feet on record drawings.

D. Confirm that separation from gravity sanitary sewers and manholes or from force mains have the minimum clearance as specified in this Section or 9 feet in all directions unless a special design is provided on the Drawings:

1. Parallel water line and gravity sanitary sewer, force main or manhole with no leaks: Minimum 4 foot horizontal clearance from outside wall of water line to outside wall of gravity sanitary sewer, force main, or manhole.
2. Water line crossing above a gravity sanitary sewer or force

main with no leaks: Minimum 2 foot vertical clearance.

E. Where above clearances cannot be attained, and a special design has not been provided on Drawings, obtain direction from the Owner before proceeding with construction.

F. Inform the Owner's Representative of any existing unmetered sprinkler or fire line connections that are not shown on Drawings. Make transfer only after approval by the Owner.

G. Trenches free of water that could impair pipe laying operations. Prevent pipe bells from coming in contact with subgrade. Grade pipe trenches to provide uniform support along bottom of pipe. Excavate for bell holes for proper sealing of pipe joints after bottom has been graded and in advance of placing pipe. Lay not more than a nominal city block length of not more than 300 feet of pipe in trench ahead of backfilling operations. Cover or backfill laid pipe if pipe laying operations are interrupted and during non-working hours. Place backfill carefully and simultaneously on each side of pipe to avoid lateral displacement of pipe and damage to joints. If adjustment of pipe is required after it has been laid, remove and re-lay as new pipe.

H. The Contractor is responsible for coordinating operations involving opening and closing valves for wet connections and for chlorination with the proper officials. Contractor is responsible for handling necessary installations and removal of chlorination and testing taps and risers.

I. If asbestos-cement pipe is encountered, follow safety practices outlined in the Asbestos-Cement Pipe Producers Association publication, Recommended Work Practices for A/C Pipe. Strictly adhere to recommended practices contained in this publication.

J. Contractor is responsible for assuring the chosen manufacturer fulfills requirements for extra fittings and, therefore, is responsible for all costs due to downtime if requirements are not met.

3.2 HANDLING, CLEANING AND INSPECTION

A. Handling:

1. Place pipe along project site where storm water or other water will not enter or pass through pipe.
2. Load, transport, unload, and otherwise handle pipe and fittings to prevent damage of any kind. Handle and transport pipe with equipment designed, constructed and arranged to prevent damage to pipe, lining and coating. Do not permit bare chains, hooks, metal bars, or narrow skids or cradles to come in contact with coatings. Where required, provide pipe fittings with sufficient interior strutting or cross bracing to prevent deflection under their own weight.
3. Hoist pipe from trench side into trench by means of sling of smooth steel cable, canvas, leather, nylon or similar material.
4. Use precautions to prevent injury to pipe, protective linings and coatings.

a. Package stacked pipe on timbers. Place protective pads under banding straps at time of packaging.
b. Pad fork trucks with carpet or other suitable material. Use

nylon straps around pipe for lift when relocating pipe with crane or backhoe.
c. Do not lift pipe using hooks at each end of pipe.
d. Do not place debris, tools, clothing, or other materials on pipe.

5. Repair damage to pipe or protective lining and coating before final acceptance.
6. Permit no visible cracks longer than 6 inches, measured within 15 degrees of a line parallel to pipe longitudinal axis in the cores of finished pipe with the following exceptions:

a. In the surface laitance of centrifugally cast concrete.
b. In sections of pipe with steel reinforcing collars or wrappers.
c. Within 12 inches of pipe ends.

7. Reject pipe with visible cracks (not meeting exceptions) and remove from project site.

B. Cleaning: Thoroughly clean and dry interior of pipe and fittings of foreign matter before installation, and keep interior clean until the Work has been accepted. Keep joint contact surfaces clean until jointing is completed. Do not place debris, tools, clothing or other materials in pipe. After pipe laying and joining operations are completed, clean inside of pipe and remove debris.

C. Inspection: Before installation, inspect each pipe and fitting for defects. Reject defective, damaged or unsound pipe and fittings and remove them from site.

3.3 EARTHWORK

A. Conform to applicable provisions of Section 31 23 35.00 - Excavation and Backfill for Utilities.

B. Bedding: Use bedding materials in conformance with Section 31 23 23.13 - Utility Backfill Materials.

C. Backfill: Use bank run sand or earth or native soil as specified in Section 31 23 23.13 - Utility Backfill Materials. Backfill excavated areas in the same day excavated. When not possible, cover excavated areas using steel plates on paved areas and other protective measures elsewhere.

D. Place material in uniform layers of prescribed maximum loose thickness and wet or dry material to approximately optimum moisture content. Compact to prescribed density. Field density tests may be made at a frequency determined by the Owner. Water tamping is not allowed.

E. Pipe Zone: Including 6-inch pipe bedding and backfill to 12 inches above top of pipe.

3.4 PIPE CUTTING

Cut pipe 12 inches and smaller with standard wheel pipe cutters. Cut pipe larger than 12 inches in manner approved by the Owner. Make cuts smooth and at right angles to axis of pipe. Bevel plain end with heavy file or

grinder to remove sharp edges.

3.5 PIPING INSTALLATION

A. Do not lay pipe unless subgrade is free of water. Make adjustments of pipe to line and grade by scraping away subgrade or filling in with granular material. Wedging or blocking up bell will not be acceptable.

B. Properly form bedding to fully support bell without wedging or blocking up bell.

C. Do not install pipe at greater depth than its design allows.

D. Protection of Pipeline: Securely place stoppers or bulkheads in openings and in end of line when construction is stopped temporarily and at end of each day's work.

3.6 JOINTS AND JOINTING

A. Rubber Gasketed Bell-and-Spigot Joints (Steel Pipe):

1. After rubber gasket is placed in spigot groove of pipe, equalize rubber gasket cross section by inserting tool or bar recommended by manufacturer under rubber gasket and moving it around periphery of pipe spigot.
2. Lubricate gaskets with nontoxic water-soluble lubricant before pipe units are joined.
3. Fit pipe units together in manner to avoid twisting or otherwise displacing or damaging rubber gasket.
4. After the pipe sections are joined, check gaskets to ensure that no displacement of gasket has occurred. If displacement has occurred, remove pipe section and remake joint as for new pipe. Remove old gasket, inspect for damage and replace if necessary before remaking joint.

B. Flanged Joints (Steel Pipe):

1. AWWA C207. Prior to installation of bolts, accurately center and align flanged joints to prevent mechanical prestressing of flanges, pipe and equipment. Align bolt holes to straddle vertical, horizontal or north-south center line. Do not exceed 3/64 inch per foot inclination of flange face from true alignment.
2. Use full-face gaskets for flanged joints. Provide 1/8-inch-thick cloth inserted rubber gasket material. Cut gaskets at the factory to proper dimensions.
3. Use galvanized or black nuts and bolts to match flange material. Use cadmium-plated steel nuts and bolts underground. Tighten bolts progressively to prevent unbalanced stress. Draw bolts tight to ensure proper seating of gaskets.
4. All flanges below grade s hall have stainless steel bolts and nuts.

C. Dielectric Fitting Installation:

1. Install dielectric fittings in piping at connections of dissimilar metal piping and tubing.
2. Dielectric Fittings for [NPS 2 (DN 50)] and Smaller: Use dielectric couplings couplings, nipples or unions.

D. Joint Testing:

1. In addition to testing individual joints with feeler gauge approximately 1/2-inch wide and 0.015-inch thick, use any other joint testing procedure approved or recommended by pipe manufacturer which will help ensure watertight installation prior to backfilling. These tests shall be made at no additional cost to the Owner.
2. Test 100 percent of welded joints including any joint or seam welded after successful hydrostatic testing by methods as described above. The Owner reserves right to require additional tests if tests performed indicate an unacceptable weld. Repair rejected weld.

E. Quality Inspection: Make curves and bends by deflecting joints or other method as recommended by manufacturer and approved by the Owner. Contractor may submit details of other methods of providing curves and bends for consideration by the Owner, and if accepted, shall be installed at no additional cost to the Owner.

1. Deflection of pipe joints shall not exceed maximum deflection recommended by pipe manufacturer, unless otherwise indicated on Drawings.
2. If deflection exceeds that specified but is less than 5 percent, repair entire deflected pipe section such that maximum deflection allowed is not exceeded.
3. If deflection is equal to or exceeds 5 percent from that specified, remove entire portion of deflected pipe section and install new pipe.
4. Replace, repair, or reapply coatings and linings as required.
5. Assessment of deflection may be measured by the Owner at any location along pipe. Arithmetical averages of deflection or similar average measurement methods will not be deemed as meeting intent of standard.
6. When rubber gasketed pipe is laid on a curve, join pipe in a straight alignment and then deflect to curved alignment.
7. Fill exposed interior and exterior surfaces with non-shrink grout.

3.7 SECURING, SUPPORTING AND ANCHORING

A. Support piping as shown on Drawings and as specified in this Section, to maintain line and grade and prevent transfer of stress to adjacent structures.

B. Where shown on Drawings, anchor pipe fittings and bends installed on water main by welding consecutive joints of pipe together to distance each side of fitting. Restrained length, as shown on Drawings, assumes that installation of pipe and subsequent hydrostatic testing begins upstream and proceed downstream, with respect to normal flow of water in pipe. If installation and testing differs from this assumption, submit for approval revised method of restraining pipe joints upstream and downstream of device used to test against (block valve, blind flange or dished head plug).

C. Use adequate temporary blocking of fittings when making connections to distribution system and during hydrostatic tests. Use sufficient anchorage and blocking to resist stresses and forces

encountered while tapping existing water line.

3.8 THRUST RESTRAINT

A. Prevent any lateral movement of thrust restraints throughout pressure testing and operation. Place 1500 psi concrete conforming to Section 03 30 00 - Cast-in-Place Concrete, for blocking at each change in direction of existing water lines, to brace pipe against undisturbed trench walls. Finish placement of concrete blocking, made from Type I cement, 4 days prior to hydrostatic testing of pipeline. Test may be made 2 days after completion of blocking if Type II cement is used.

B. Passive resistance of soil will not be permitted in calculation of thrust restraint.

C. Use minimum 16-foot length of pipe in and out of joints made up of beveled pipe where restraint joint lengths are not identified on Drawings. Otherwise, provide welded restraint joints for a minimum length of 16 feet on each side of beveled joints.

3.9 CLEANUP AND RESTORATION

A. Provide cleanup and restoration crews to work closely behind pipe laying crews, and where necessary, during chlorination, testing, service transfers, abandonment of old mains, backfill and surface restoration.

B. Upon completion chlorinate and pressure test. Begin transfer of services no later than 7 calendar days after successful completion of chlorination and pressure testing.

C. After transfer of services, but no later than 21 calendar days after successful completion of chlorination and pressure testing, begin abandonment of old mains, including resodding and placement of sidewalks and pavements.

D. Do not begin construction of additional sections if above conditions are not met.

3.10 CLEANING PIPING SYSTEMS

Remove construction debris or foreign material and thoroughly clean and flush piping systems. Provide temporary connections, equipment and labor for cleaning.

3.11 DISINFECTION OF WATER LINES

Conform to requirements of Section 33 51 40.00 - Disinfection of Water lines.

3.12 FIELD HYDROSTATIC TESTS

Conform to requirements of Section 33 14 00.00 - Hydrostatic Testing of Pipelines.

-- End of Section --

SECTION 33 40 00.00

STORM DRAINAGE UTILITIES
06/20

PART 1 GENERAL

Subject to the General and Supplementary Conditions, this section includes but is not limited to the furnishing, placing and construction of storm sewers, manholes, inlets, miscellaneous drainage structures, outfall structures and appurtenances for drainage of pavements, roadways, railroad track areas, ditches and other surface areas, including the construction of new storm drainage systems and/or the extension or modification of existing storm drainage systems, as described and specified herein and elsewhere in other sections of the contract specifications and as shown on the Drawings.

1.1 REFERENCES

The publications listed below form a part of this specification to the extent referenced. The publications are referred to within the text by the basic designation only.

ASTM INTERNATIONAL (ASTM)

ASTM A48/A48M	(2003; R 2012) Standard Specification for Gray Iron Castings
ASTM A536	(1984; R 2014) Standard Specification for Ductile Iron Castings

1.2 SUBMITTALS

Contractor shall provide submittals in conformance with the requirements of the General and Supplementary Conditions, and in accordance with Section 01 33 00 SUBMITTAL PROCEDURES. Submit the following:

SD-03 Product Data

Grates And Frames

High Density Polyethylene (Hdpe) Solid And Profile Wall Pipe

Precast Concrete Manholes

Frames And Covers

SD-05 Design Data

Pipe Design

Storm Sewer Structure Design

1.3 RELATED SECTIONS

Drawings and general provisions of the Contract, including General and Supplementary Conditions and other Division 01 Specification Sections, apply to this Section. Other technical specification sections that may relate to this section, include but are not limited to the following:

A. Section 33 11 16.00 - High Density Polyethylene (HDPE) Solid and Profile Wall Pipe
B. Section 03 30 00 - Cast-In-Place Concrete
C. Section 33 05 15 - Precast Concrete Manholes And Junction Boxes
D. Section 33 08 40.00 - Frames, Grates, Rings And Covers
E. Section 31 32 13.17 - Cement Stabilized Sand Fill
F. Section 31 23 35.00 - Excavation and Backfill for Utilities
G. Section 31 23 23.13 - Utility Backfill Materials

1.4 MEASUREMENT AND PAYMENT

No separate payment shall be made for Work under this specification. Payment for Work associated with this specification shall be included in the overall Lump Sum project cost.

PART 2 PRODUCTS

2.1 GENERAL

A. Storm sewers shall have precast reinforced concrete pipe, High Density Polyethylene (HDPE) pipe, polyvinyl chloride pipe, corrugated metal pipe, reinforced concrete box sewer or cast iron pipe, or a combination of these, as indicated and detailed on the drawings and in accordance with the specifications.

B. The Contractor shall submit to the Owner's Representative for approval a complete list, including catalog data and descriptive matter, of all products and equipment the Contractor proposes to furnish, shop drawings of equipment, and piping details as may be required by the Owner's Representative.

C. The Contractor is allowed to provide a pre-cast or cast-in-place option for each storm sewer structure. Dimensions are provided in the plans for use in developing design submittals. Both pre-cast and cast-in-place structures meeting the design layout intention of each structure must be submitted for review. Documentation for pre-cast and cast-in-place structures shall include calculations and detailed drawings indicating each structure meets the intended loadings, and are designed to consider resistance to floatation effects under FEMA base flood conditions. Storm sewer structure design, whether pre-cast or cast-in-place, shall be sealed by an Engineer licensed/ registered in the state of Texas.

D. Pipe Design - The Contractor shall submit to the Owner's Representative for approval a pipe design that supports the pipe materials chosen by the Contractor to support the design as shown on the plans. This pipe design submittal shall be sealed by an Engineer licensed/registered in the State of Texas. Objective of design submittal is to verify pipe material classifications provided will support and conform to the proposed project loading requirements, that pipe connections are water tight and conform to manufacturer requirements, and that there is adequate considerations for construction loadings, and countermeasures for floatation as necessary.

E. Connections to existing storm sewers shall be made as shown by the Drawings and as specified.

2.2 MATERIAL

A. High Density Polyethylene (HDPE) Solid and Profile Wall Pipe: Conform to the requirements of Section 33 11 16.00 - High Density Polyethylene (HDPE) Solid and Profile Wall Pipe, and as shown on the Drawings.

B. Concrete: Except as noted on the Drawings or provided otherwise in the Technical Specifications, concrete for reinforced concrete box sewers, inlets, junction boxes, manholes and other drainage structures shall be Class C concrete as described in Section 03 30 00 - CAST-IN-PLACE CONCRETE. The materials, proportioning, testing, mixing, placing, forms and finishing shall be in accordance with the requirements of the aforementioned Section.

C. Reinforcing Steel: Reinforcing steel bars where indicated on the Drawings for storm drainage structures, including reinforced concrete box sewers, and special drainage structures, shall be new billet steel reinforcing bars conforming to the requirements of Section 03 30 00 - CAST-IN-PLACE CONCRETE. The fabrication, splicing, placing and support of such bars shall be in accordance with the requirements of the aforementioned Section.

D. Precast Concrete Manholes: Conform to requirements of Section 33 05 15 PRECAST CONCRETE MANHOLES AND JUNCTION BOXES, and as shown on the Drawings.

E. Cast Iron Frames and Covers: Cast iron for manhole frames and covers and inlet grates, frames and beams, shall conform to the shape and dimensions shown on the Drawings and shall be clean and perfect, free from sand or blow holes or other defects. Holes in cover must be free from plugs and shall be clean. Bearing surfaces of manhole frames and covers are to be machined so that even bearing may be had in any position in which manhole cover is seated in the frame. Cast iron shall conform to ASTM A48/A48M for Class 30 Gray Cast Iron. All frames and covers shall be aircraft rated as per Section 33 08 40.00 FRAMES, GRATES, RINGS AND COVERS, unless approved otherwise by the Owner's Representative.

F. Concrete Trench Drains:

1. Concrete Trench:

a. Concrete for the concrete trench shall be Class C in accordance with Section 03 30 00 - CAST-IN-PLACE CONCRETE.

b. The area from which soil is excavated adjacent to the walls of the trench from bottom of concrete to bottom of pavement, as shown on the Drawings, shall be backfilled with cement stabilized sand, furnished and placed in accordance with Section 31 32 13.17 - CEMENT STABILIZED SAND FILL.

2. Grates and Frames:

a. Grates and frames shall be extra heavy duty, East Jordan 6954 or Owner approved substitution. Dimensional tolerances for the placement of frames and grates shall be as designated on the Drawings, grates to be fixed to frame with alternating fixed anchor pin and removable anchor pin in accordance with the

manufacturers recommendations, and installations not meeting such tolerances will be rejected. Ductile iron grates shall conform to ASTM A536 Grade 80-55-06.

b. The Contractor shall furnish the Owner's Representative with authentic, legible mill test reports for all the trench castings. Trench castings shall not be used unless laboratory tests made by a laboratory selected by the Owner's Representative determine that the cast iron conforms to the above ASTM Specifications. The cost of such tests shall be paid by the Contractor. In the event laboratory tests are used in lieu of mill test reports, acceptance of the ductile iron material by the Owner's Representative will be made on the basis of acceptable tests results of castings.

G. Ductile Iron Frames and Covers: Ductile iron for manhole frames and covers and inlet grates, frames and beams shall conform to the shape and dimensions shown on the Drawings and shall be clean, free from sand or blow holes or other defects. Holes in covers must be free from plugs and shall be clean. Bearing surfaces of manhole frames and covers are to be machined so that even bearing may be had in any position in which manhole cover is seated in the frame. Ductile iron shall conform to ASTM A536.

E. Endwall structures: Provide endwall structures in accordance with TxDOT standard detail CH-FW-0 for concrete headwalls. Riprap protection at endwalls shall be provided in accordance with TxDOT Item 432 Riprap. Riprap protection shall be 18 inches thick, and shall extend up the side slopes to the top of the pipe elevation and extend out from the endwall a distance equal to six times the pipe diameter.

PART 3 EXECUTION

3.1 REINFORCED CONCRETE SEWER PIPE

A. General:

1. The Contractor shall take special care to locate only Class IV pipe under all railroads for not less than the distances shown on the Drawings. Where no distance is shown, Class IV pipe shall extend under railroad tracks to not less than ten feet from centerline of track as measured at right angles to track.

2. Elliptically reinforced pipe shall be carefully laid with elliptical reinforcement closest to outside of the pipe at sides of pipe on the pipe's horizontal axis.

3. No pipe shall be laid that has spalls or cracks on either end that would affect the tightness of the joint. The pipe must be stamped by a competent testing laboratory as evidence of compliance with the ASTM Specifications.

4. Install in accordance with pipe manufacturer's recommendations and as specified in this Section.

B. Laying Pipe:

1. All sewers shall be laid true to line and grade with bells upgrade. The sections of the pipe shall be so laid and fitted together that when complete the sewer will have a smooth and

uniform invert. The pipe shall be kept thoroughly clean so that jointing compound will adhere. Each pipe shall be inspected for defects before being lowered into the trench.

2. The excavation of trenches shall be fully completed at a sufficient distance, not exceeding 100 feet unless permitted by the Owner's Representative, in advance of the laying of the sewer to maintain a true alignment.

3. The exposed ends of all pipes shall be fully protected with a board or other approved stopper to prevent earth or other substances from entering the pipe. The interior of the sewer shall be carefully cleaned from all dirt, cement, or superfluous material of every description as the work progresses.

4. Install pipe to line and grade indicated on Drawings. Place pipe so that it has a continuous bearing of barrel on bedding material with no voids, is laid in trench so interior surfaces of pipe follows grades and alignments indicated. The Contractor will not be authorized to put in siphons or other structures which will allow the sewer to deviate from the given line without the written authority of the Owner's Representative.

5. The pipes shall be laid with the spigot end downstream entering the bell to full depth and in such manner as not to drag earth into the annular space for the grouting of the joints.

C. Pipe Bedding:

1. The pipe shall be bedded in the trench as described herein and as shown on the Drawings. In every case where trenches have been excavated below the specified depth for bedding, the depth of bedding below pipe shall be increased to fill the over-depth space.

2. Except under railroad tracks, bedding shall be done in the following manner and as shown by Pipe Installation in the Drawings:

a. The bottom of the trench for the pipe barrel shall be excavated to a line parallel to the flow line of the pipe and to a depth of not less than three inches below the bell when bell and spigot is used, and not less than five inches below the outside of the pipe barrel when tongue and groove pipe is used. The cement stabilized sand shall be spread over the entire bottom of the sewer trench to the flow-line grade of the sewer after which a subgrade conforming to the outside shape of the pipe shall be prepared. Cement stabilized sand shall be used to backfill the sewer trench up to the horizontal diameter of the pipe after the pipe has been installed or above as shown in the Drawings. The cement stabilized sand for pipe bedding and pipe trench backfill shall be composed of course-grained sand and not less than one and one-half sacks of Portland cement per cubic yard of mixture, mixed in a concrete type mixer. This material cannot be used after it loses its moisture content or dries out. It shall be rodded in the trench and the area between the horizontal diameter of the pipe and bottom of the trench shall be free of cavities.

b. Loose earth backfill material shall be placed to a depth of six inches above the pipe before ceasing operations for the day. No backfill in excess of six inches above the top of the pipe

shall be placed on the same day the pipe is laid and bedded. Backfill above the pipe shall be done as prescribed for backfilling reinforced concrete drainage sewers in Section 31 23 35.00 - Excavation and Backfill for Utilities.

c. Where the trench bottom seeps water to the extent soft unstable conditions are produced, washed shell must be substituted for cement stabilized sand under the pipe.

3. Alignment of pipe will be checked and any misalignment shall be corrected as set out for sewer pipe, regardless of type of bedding.

3.2 REINFORCED CONCRETE SEWER PIPE EXCAVATION, TRENCHING AND BACKFILLING FOR REINFORCED CONCRETE DRAINAGE SEWERS, MANHOLES, INLETS AND APPURTENANCES

A. General:

1. Whatever substances encountered shall be excavated to the depth of sewers, manholes, inlets and other drainage structures shown on the Drawings. Excavated material shall be used for fill or backfill, as directed by the Owner's Representative provided it meets the requirements of Section 31 23 23.13 - Utility Backfill Materials or Section 31 23 35.00 - Excavation and Backfill for Utilities.

2. The Contractor shall furnish and place in positions as directed by the Owner's Representative, all the necessary batter boards for locating the work. The grade boards shall be of such size timber as the Owner's Representative directs and be substantially supported. The batter boards shall be one inch by three inches, planed on all four sides to truly parallel faces. The boards and all location stakes must be protected from injury or change, and twilled lines for use in giving lines and grades, the necessary plummets and graduated poles shall be of a form approved by the Owner's Representative.

3. Excavations for manholes, inlets and other accessories shall have 12 inch minimum and 24 inch maximum clearance on all sides.

4. Excess excavation below required level, except as otherwise specified, shall be backfilled with earth, sand, gravel or concrete as directed by the Owner's Representative, and thoroughly tamped.

5. Unstable soil shall be removed and replaced with select material approved by the Owner's Representative, thoroughly tamped into place. The depth of removal of unstable soil shall be as shown on the Drawings.

6. Ground adjacent to all excavations shall be graded to prevent water running into excavations and any water accumulated in the excavations will be removed by pumping or other means approved by the Owner's Representative.

B. Trench Excavation:

1. Conform to requirements of Section 31 23 35.00 - Excavation and Backfill for Utilities.

2. See requirements for the construction of concrete pipe hereinafter under this Section for special excavation and backfilling provisions for reinforced concrete box sewers.

C. Dewatering Trench: No box sewer or pipe sewer shall be laid in a trench in the presence of water. All water shall be removed from trench sufficiently ahead of sewer placing operation to ensure a dry, firm bed on which to place the sewer, and trench will continue to be dewatered until after all concrete, mortar and joint material is set. Removal of water may be accomplished by bailing, pumping, or pumping in connection with well-point installation, as the particular situation may warrant. It is the Contractor's responsibility to identify locations where dewatering is warranted and to provide dewatering. Dewatering is to be provided at no additional cost to the Owner.

D. Bracing and Shoring: Where necessary, in the Owner's Representative's opinion, the sides of the trench shall be braced and rendered secure to the satisfaction of the Owner's Representative until the sewer has been laid and the trenches backfilled as hereinafter specified to a depth of at least 12 inches above the top of sewer. All bracing or sheet piling shall be provided at the Contractor's expense and no extra compensation will be allowed therefore except such time that is ordered left in the trench by the Owner's Representative. The Contractor shall at all times remain responsible for bracing and shoring as well as worker safety.

E. Backfilling:

1. The following method of backfilling shall be used over and around precast pipe, manholes, inlets and other sewer appurtenances. Backfill material meeting the requirements of Section 31 23 23.13 - Utility Backfill Materials, approved by the Owner's Representative, shall be placed in six-inch (loose thickness) maximum layers and carefully compacted up to a minimum of one foot above the top of the sewer. For all storm sewer pipes from a point one foot above the top of sewer or leads to a point one and one-half foot below the surface of the ground backfill will be placed in accordance with Section 31 23 35.00 - Excavation and Backfill for Utilities.

2. After this operation has been completed to the satisfaction of the Owner's Representative, the final one and one-half foot shall be placed and hand or machine compacted or rolled to secure compaction as directed by the Owner's Representative. The Owner's Representative reserves the right to require the Contractor to use select material for the backfill at no extra compensation.

3. The following method of backfilling shall be employed where the sewers, manholes, inlets and other drainage appurtenances will be under shed or warehouse floors, pavements, paved roadways, or railroad tracks as indicated on the Drawings. Place backfill in accordance with Section 31 23 35.00 - Excavation and Backfill for Utilities. Material approved by the Owner's Representative shall be placed around and over pipes or sewers in six-inch (loose thickness) maximum layers and carefully compacted up to a minimum of six inches above the top of pipe or sewer. Above this level over pipe and around structures, the earth backfill shall be compacted with power equipment by layers not to exceed six inches

(compacted thickness). Pockets of silty and spongy material that may be found in the original undisturbed soil shall not be considered in making the comparison. Moisture shall be added or the soil be allowed to dry out if necessary to achieve the required moisture content.

4. The backfill around manholes and inlets under pavements and railroads shall not be placed until the day after the structure is built and shall be power tamped from the bottom of the excavation to the subgrade, compacted the same as specified above for connecting sewers and leads in these areas.

5. The backfill as outlined above for pavement and railroad areas shall extend under all pavements and to a point five feet beyond the pavement and also under all existing and proposed railroad tracks shown on the Drawings to a point 12 feet from centerline of each track.

3.3 HIGH DENSITY POLYETHYLENE (HDPE) SOLID AND PROFILE WALL PIPE:

A. General:

1. Whatever substances encountered shall be excavated to the depth of sewers, manholes, inlets and other drainage structures shown on the Drawings. Excavated material shall be used for fill or backfill, as directed by the Owner's Representative provided it meets the requirements of Section 31 23 23.13 - Utility Backfill Materials or Section 31 23 35.00 - Excavation and Backfill for Utilities.

2. The Contractor shall furnish and place in positions as directed by the Owner's Representative, all the necessary batter boards for locating the work. The grade boards shall be of such size timber as the Owner's Representative directs and be substantially supported. The batter boards shall be one inch by three inches, planed on all four sides to truly parallel faces. The boards and all location stakes must be protected from injury or change, and twilled lines for use in giving lines and grades, the necessary plummets and graduated poles shall be of a form approved by the Owner's Representative.

3. Excavations for manholes, inlets and other accessories shall have 12 inch minimum and 24 inch maximum clearance on all sides.

4. Excess excavation below required level, except as otherwise specified, shall be backfilled with earth, sand, gravel or concrete as directed by the Owner's Representative, and thoroughly tamped.

5. Unstable soil shall be removed and replaced with select material approved by the Owner's Representative, thoroughly tamped into place. The depth of removal of unstable soil shall be as shown on the Drawings.

6. Ground adjacent to all excavations shall be graded to prevent water running into excavations and any water accumulated in the excavations will be removed by pumping or other means approved by the Owner's Representative.

B. Trench Excavation:

1. Conform to requirements of Section 31 23 35.00 - Excavation and Backfill for Utilities.

2. See requirements for the construction of HDPE pipe sewers hereinafter under this Section for special excavation and backfilling provisions.

C. Dewatering Trench: No pipe sewer shall be laid in a trench in the presence of water. All water shall be removed from trench sufficiently ahead of sewer placing operation to ensure a dry, firm bed on which to place the sewer, and trench will continue to be dewatered until after all joint materials are set and tested water tight as per design calculations and manufacturer guidelines. Removal of water may be accomplished by bailing, pumping, or pumping in connection with well-point installation, as the particular situation may warrant. It is the Contractor's responsibility to identify locations where dewatering is warranted and to provide dewatering in accordance with Section 01 57 25.00 - Ground Water & Surface Water Control. Dewatering is to be provided at no additional cost to the Owner.

Bracing and Shoring: Where necessary, in the Owner's Representative's opinion, the sides of the trench shall be braced and rendered secure to the satisfaction of the Owner's Representative until the sewer has been laid and the trenches backfilled as hereinafter specified to a depth of at least 12 inches above the top of sewer. All bracing or sheet piling shall be provided at the Contractor's expense and no extra compensation will be allowed. The Contractor shall at all times remain responsible for bracing and shoring as well as worker safety.

D. Backfilling:

1. The following method of backfilling shall be used over and around HDPE pipe, concrete manholes, inlets and other sewer appurtenances. Backfill material meeting the requirements of Section 31 23 23.13 - Utility Backfill Materials, approved by the Owner's Representative, shall be placed in six-inch (loose thickness) maximum layers and carefully compacted up to a minimum of one foot above the top of the sewer. For all storm sewer pipes from a point one foot above the top of sewer or leads to a point one and one-half foot below the surface of the ground backfill will be placed in accordance with Section 31 23 35.00 - Excavation and Backfill for Utilities.

2. After this operation has been completed to the satisfaction of the Owner's Representative, the final one and one-half foot shall be placed and hand or machine compacted or rolled to secure compaction as directed by the Owner's Representative. The Owner's Representative reserves the right to require the Contractor to use select material for the backfill at no extra compensation.

3. The following method of backfilling shall be employed where the sewers, manholes, inlets and other drainage appurtenances will be under shed or warehouse floors, pavements, paved roadways, or railroad tracks as indicated on the Drawings. Place backfill in accordance with Section 31 23 35.00 - Excavation and Backfill for Utilities. Material approved by the Owner's Representative shall be placed around and over pipes or sewers in six-inch (loose

thickness) maximum layers and carefully compacted up to a minimum of six inches above the top of pipe or sewer. Above this level over pipe and around structures, the earth backfill shall be compacted with power equipment by layers not to exceed six inches (compacted thickness). Pockets of silty and spongy material that may be found in the original undisturbed soil shall not be considered in making the comparison. Moisture shall be added or the soil be allowed to dry out if necessary to achieve the required moisture content.

4. The backfill around manholes and inlets under pavements and railroads shall not be placed until the day after the structure is built and shall be power tamped from the bottom of the excavation to the subgrade, compacted the same as specified above for connecting sewers and leads in these areas.

5. The backfill as outlined above for pavement and railroad areas shall extend under all pavements and to a point five feet beyond the pavement and also under all existing and proposed railroad tracks shown on the Drawings to a point 12 feet from centerline of each track.

3.4 MANHOLES

A. Manholes shall be constructed at locations shown on the Drawings, of the type and depth indicated, in accordance with details shown on the Drawings and these Specifications.

B. Pipe connections are to be water tight.

C. Walls for structures within paved area are to be constructed of Class C concrete. Walls for structures outside of proposed or future paved areas may be constructed of Class C concrete or brick. Where brick is used in the construction of manholes, every fifth course of brick shall be laid in such a manner as to effect a tie between such course and the courses immediately there under. In general, the long axis of the tie course will be perpendicular to the long axis of the preceding four courses. Thoroughly wet brick before laying.

D. On pipe sewers, the concrete foundation for manholes shall be placed as soon as practicable after the sewer is complete through the manhole location. Unless otherwise directed, bases for manholes or monolithic concrete sewers shall be placed at the same time the sewer is being constructed. Steps shall be placed in walls as shown by Drawings. One-half inch mortar joints shall be used in brick work, struck flush on inside of manhole. The outside of brick manholes shall be plastered with one-half inch mortar cover carried up with the brick work.

E. All mortar shall consist of one part Portland cement and three parts clean, durable, sharp sand meeting the specifications for concrete material.

F. Where inlet leads, main or lateral pipe sewers enter manholes, pipes shall be cut off flush with inside of manhole and any irregularities shall be pointed up with mortar.

G. Set the cast iron manhole cover frame in a full mortar bed and adjusted to the elevations on the Drawings. The inverts of the sewer

lines entering the manhole at or near the flow line elevation of the manhole shall be shaped and grouted across the floor of the manhole using mortar to obtain the proper contour.

3.5 INLETS AND DRAINAGE JUNCTION BOXES

A. All inlets and junction boxes shall be constructed to line and grade at the locations shown on the Drawings in accordance with details shown in the Drawings and these Specifications. The walls of cast in place inlets may be constructed of Class C concrete or of brick. Cast in place junction boxes shall be Class C concrete. The floor slab and beam for inlets shall be Class C concrete. All inlet and junction box leads shall be neatly cut off at the inside face of inlet or box wall and pointed up with mortar. Forms will be required for both the outside and inside faces of concrete inlet of box walls except when the nature of the material excavated is such that it can be hand trimmed to a smooth vertical face, the outside forms may be omitted if approved by the Owner's Representative.

B. Pipe connections are to be water tight.

C. Shape floor of inlets and boxes by filling with mortar to provide channels between ends of pipes.

D. Cast iron inlet plate frames shall be accurately adjusted to line, grade, and slope, and grouted in place with mortar.

E. Mortar used for construction of inlets shall be as specified for manholes.

F. All mortar shall consist of one part Portland cement and three parts clean, durable, sharp sand meeting the specifications for concrete material.

3.6 CONCRETE TRENCH DRAINS

A. All concrete trench drains shall be constructed to line and grade at the locations shown on the Drawings in accordance with details shown in the Drawings and these Specifications.

B. Shape concrete trench with forms. When installing the frame and grate units on the forms keep the sections tight to one another to eliminate creep. Make sure the gap between the grate and the concrete is not exceeding the maximum. Wire the sections to the bracing. Place rebar. Pour concrete with compressive strength as noted in applicable concrete specifications or drawings. When concrete is cured, remove the grates, marking their position and orientation then strip the forms. Replace the grates in the same location and with the same orientation as they came out. Bolts should be tightened to 15 foot-pounds.

3.7 MISCELLANEOUS AND SPECIAL CONCRETE DRAINAGE STRUCTURES

All miscellaneous and special reinforced concrete drainage structures shall be constructed of materials indicated on the Drawings and specified hereinbefore for sewers, manholes, and inlets, to location, line and grades and in accordance with details shown on the Drawings. Excavation and backfill methods shall be in accordance with applicable specifications provided hereinbefore for concrete sewers, inlets and manholes.

3.8 PROTECTION

All work, equipment and materials shall be protected at all times. The Contractor shall make good all damage caused either directly or indirectly by his workmen. Work shall be properly protected to prevent obstruction or damage. All pipe openings shall be closed with caps or plugs during installation. All equipment shall be tightly covered and protected against dirt, water, chemical and mechanical injury. At the final completion, all work shall be thoroughly cleaned and delivered in a condition acceptable to the Owner's Representative.

-- End of Section --

SECTION 35 20 23.15

DREDGING AND DISPOSAL
06/20

PART 1 GENERAL

Subject to the General and Supplementary Conditions, this section includes the supply of all labor, equipment, materials, and incidentals required to complete the dredging of material for the Berth 6 Construction project, including but not limited to contractor mobilization and demobilization, laying and maintaining dredge pipelines and casings, dredging by mechanical and/or hydraulic methods, and placing wet and dry dredge materials in the appropriate dredge disposal areas as indicated on the Contract Drawings.

1.1 REFERENCES

The publications listed below form a part of this specification to the extent referenced. The publications are referred to within the text by the basic designation only.

ASTM INTERNATIONAL (ASTM)

ASTM D1777	(1996; E 2011; R 2011) Thickness of Textile Materials
ASTM D3776/D3776M	(2009a; R 2017) Standard Test Methods for Mass Per Unit Area (Weight) of Fabric
ASTM D4491/D4491M	(2017) Standard Test Methods for Water Permeability of Geotextiles by Permittivity
ASTM D4637/D4637M	(2015) EPDM Sheet Used in Single-Ply Roof Membrane
ASTM D4751	(2016) Standard Test Method for Determining Apparent Opening Size of a Geotextile
ASTM D4833/D4833M	(2007; E 2013; R 2013) Index Puncture Resistance of Geotextiles, Geomembranes, and Related Products

1.2 SUBMITTALS

Contractor shall provide submittals in conformance with the requirements of the General and Supplementary Conditions, and in accordance with Section 01 33 00 SUBMITTAL PROCEDURES. Submit the following:

SD-01 Preconstruction Submittals

Dredge Spill Contingency Plan

Proposed Dredging Plan

Pre-Dredge Hydrographic Survey

Mobilization And Demobilization Schedule Of Values (Sov)

Turbidity Control Curtain And Anchoring Plan

Disposal Method

Quality Control Plan

SD-02 Shop Drawings

Location Of Dredge Pipelines And Casings

SD-03 Product Data

Turbidity Control Curtain

SD-07 Certificates

Dredge Equipment

SD-11 Closeout Submittals

Post-Dredge Hydrographic Survey

1.3 RELATED SECTIONS

Drawings and general provisions of the Contract, including General and Supplementary Conditions and other Division 01 Specification Sections, apply to this Section. Other technical specification sections that may relate to this section, include but are not limited to the following:

A. Section 02 41 00.00 - DEMOLITION AND DECONSTRUCTION

1.4 DEFINITIONS

A. Debris: Material such as sunken or floating garbage, plastic, wood, metal, or rubber.

B. Dry Material: Material excavated above +0.83 feet NAVD88. Do not hydraulically dredge this material.

C. Wet Material: Material excavated below +0.83 feet NAVD88. Dredge this material using a mechanical or hydraulic dredge. Place this material in the designated locations specified for each dredging method.

D. Wet Mechanical: Material excavated below +0.83 feet NAVD88 using mechanical dredge equipment (such as: clamshell bucket or dragline).

E. Wet Hydraulic: Material excavated below +0.83 feet NAVD88 using a hydraulic dredge. Place this material in contained areas with dewatering measures.

1.5 QUANTITY OF MATERIAL

For bidding purposes, assume 265,000 CY of dredging is required. A unit price item has been included in the bid for for differences in actual quantities dredged. The following is for dtermination of actual quantities during project execution.

A. Estimated Amount: Determine the total estimated amount of material

for each dredging alternative by pre-dredge soundings. The pre-dredge soundings and will be observed by the Owner's Representative. Dredging quantities will reflect conditions at the time the soundings are performed.

B. The total quantity should include two feet of advanced maintenance and one foot of overdredge as indicated on the Contract Drawings. The quantities listed are estimates only and are based on previous survey information. Complete the work specified whether the quantities involved are greater or less than those estimated.

C. Overdredging: To cover unavoidable inaccuracies of dredging processes, material actually removed to a maximum one foot below the depth specified and within dredging limits will be measured and paid for at full contract price. No additional compensation for dredging beyond the elevations specified on the Drawings.

D. Side Slopes: Dredge side slopes as closely as practicable to the lines indicated or specified. Final dredged soil profile as measured vertically shall be within plus/minus one foot of the lines shown on the Drawings. Dredging beyond the one-foot allowance is not considered a payable item. Pay for material to be replaced and compacted.

1.6 CHARGES

Pay charges imposed by any Federal, State, or local agency for disposal of dredged material in an area outside of those specified in the Contract.

1.7 QUALITY ASSURANCE

Provide for the timely installation and maintenance of all sedimentation and erosion control measures and all turbidity control curtains necessary to perform all dredging, dewatering, and drying of dredged material and disposal of dried material as specified and as shown on the Drawings. Measures in addition to those shown on the Drawings shall be installed, maintained, removed, and cleaned up at no cost to the Owner.

Submit a Quality Control Plan in accordance with section 01 40 00.00 QUALITY REQUIREMENTS. The plan shall include a written of the following Quality Control specifics, at a minimum:

QC Personnel
QC Procedures for Material Sampling and Environmental Controls
QC Procedures for Surveying and Quantity Tracking
QC Procedures for Material Collection
QC Procedures for Transportation and Disposal

1.7.1 DREDGING PLANS

A. Submit the proposed dredging plan for approval 15 days prior to the start of dredging operations. Provide a detailed description of procedures, methods. and equipment to be used for each portion of the operation including dredging, containment systems, de- watering procedures, material drying procedures, hauling operations, and final disposal operations. Provide Drawings of all equipment, equipment layout, and pipeline alignments including dimensions at the wharf frontage and at disposal sites. Include as a part of this dredging plan a detailed description of the equipment, personnel, and procedures provided to assure the maintenance of roads during material hauling

operations. The dredging plan shall include contingency plans and actions for obstructions encountered during dredging activities.

B. Submit a dredge spill contingency plan for approval 30 days prior to the start of dredging operations. Include in the plan a description of the monitoring plan at the disposal site and site clean-up procedures for any unauthorized discharge from the disposal site.

1.8 MOBILIZATION AND DEMOBILIZATION

A. Submit a Mobilization and Demobilization Schedule of Values (SOV) associated with mobilization and demobilization for dredging activities.

B. Mobilization shall include all activities associated with transportation of Contractor's personnel, equipment, and operating supplies to the site; hydrographic surveying and any necessary general facilities for the Contractor's operations at the site; premiums paid for performance and payment bonds including insurance as applicable.

C. Demobilization shall include all activities associated with transportation of Contractor's personnel, equipment, and operating supplies not required or included in the contract from the site. This includes the disassembly, removal and site clean-up of facilities assembled on the site specifically for the project.

1.9 MEASUREMENT AND PAYMENT

No separate payment shall be made for Work under this specification. Payment for Work associated with this specification shall be included in the overall Lump Sum project cost, and as noted in the bid for for unit quantities that differ from the base bid dredging quantities.

ALternate price items have been provided based on the approved dredge material disposal locations. For the Base Bid amount, the contractor shall assume the Placement Area 8 shall be used for disposal of dredge material. Alternative A shall be based on disposal in Placement Area 11 instead of Placement Area 8. Alternative B shall be based on disposal in Placement Area 9a instead of Placement Area 8. Alternative C shall be based on disposal in Placement Area 9b instead of Placement Area 8.

PART 2 PRODUCTS

2.1 TURBIDITY CONTROL CURTAIN

Turbidity curtains shall be provided if required by environmental permits and regulatory agencies.

A. Contractor shall submit a turbidity control curtain and anchoring plan suitable for site conditions to the Owner's Representative for approval. Contractor to be held responsible for turbidity control curtain and anchoring performance and shall modify as requested by the Owner and/or Owner's Representative at no additional cost.

B. Turbidity control curtain shall consist of flexible polyester reinforced vinyl filter fabric dielectrically welded to provide an upper hem for enclosing flotation material and a lower hem for enclosing ballast material. Adequate flotation and ballast shall be provided for each installation. Each curtain shall be made up of one or more sections run from shoreline to shoreline, length as required per

each installation. Multiple sections shall be connected using shackled and bolted load lines with reinforced PVC pipe for watertight fabric closure. Appropriate depth of fabric, flotation material, and ballast shall be used for each installation.

C. Filter fabric for turbidity control curtains shall meet the following properties.

	Average Physical Property	Test Method
Weight	6.2 oz/yd	ASTM D3776/D3776M
		ASTM D1777
Elongation at Break	28 percent (warp) 24 percent (fill)	ASTM D4637/D4637M
Puncture Length	180 lbs	ASTM D4833/D4833M
A.O.S. Std. Sieve	70 to 100	ASTM D4751
Flow Rate	23 gpm/sf	ASTM D4491/D4491M

2.2 DREDGE EQUIPMENT

Dredging shall be completed by either mechanical dredging or hydraulic dredging methods, in accordance with the dredging plan. Equipment shall be suitable for the dredging environment and project location, and appropriately sized for completion of dredging work in a timely manner.

PART 3 EXECUTION

3.1 ENVIRONMENTAL PROTECTION REQUIREMENTS AND PERMITS

A. Comply with conditions and requirements of the U.S. Army Corps of Engineers Dredging and Disposal Permit, the Texas Commission on Environmental Quality, Dredging and Disposal Permit, the Purchase Order issued by the Owner, and other State or Federal Permits. The Owner will secure the permits for dredging and disposal of material as indicated.

B. Provide and maintain environmental protective measures during the life of the Contract. Also, provide environmental protective measures required to correct conditions such as oil spills or debris that occur during the dredging operations. Comply with Federal, State, and local regulations pertaining to water, air, and noise pollution.

3.2 TURBIDITY CONTROL CURTAIN INSTALLATION

Turbidity curtains shall be provided if required by environmental permits and regulatory agencies.

A. Turbidity control curtains shall be installed prior to commencing any dredging work. Turbidity curtains shall be used during the entire dredging operation to minimize increases in turbidity outside the area of dredging.

B. Permanent turbidity control curtains shall be installed at

locations approved by the Owner's Representative. These shall remain in place during the entire period of dredging work and shall be removed only after final acceptance of the dredging work.

C. Temporary turbidity control curtains shall be installed both upstream and downstream of the dredging work and relocated as the work progresses.

D. Provide a floating boom with a skirt length of seven feet around the dredging and unloading sites to prevent the release of floating debris into the waterways and to control turbidity. Provide crews with dip nets to clean all floating debris generated or re- suspended by operations. Dispose of the debris in a manner approved by the Owner's Representative. Provide floating silt curtain to contain suspended sediments in the water column.

E. The turbidity control curtains shall be maintained in good operating condition during the entire period of dredging work.

3.3 INSPECTION

A. Inspect the work, keep records of work performed, and assure that gauges, targets, ranges, and other markers are in place and usable for the intended purpose. Furnish at the request of the Owner's Representative boats, boatmen, laborers, and materials necessary for inspecting, supervising, and surveying the work. When required by the Owner's Representative, provide transportation for the Owner's Representative to and from the dredging plant and offloading site and adjacent points on shore.

3.4 CONDUCT OF DREDGING WORK

A. Order of Work: The order of the work will be based on the proposed dredging plan.

B. Dredge Pipelines and Casings

1. Make all arrangements including right-of-way and permits for locating and installing dredge pipelines and casings. Submit location of dredge pipelines and casings for review. Mark appropriately all dredge pipelines and casings.

2. Leave casings in place at the completion of dredging work as directed by the Owner's Representative.

C. Dredging

1. Upon approval of all required submittals, the area will be made available to verify allowable working hours and days with the Owner's Representative. Present the proposed dredging plan and request approval of the Owner's Representative before starting the dredging works.Allowable working hours and days shall be 24 hours per day, 7 days per week.

2. The Owner's Representative may amend this schedule and will inform of such changes.

D. Disposal

1. Provide for safe transportation and disposal of dredged materials. Transport and dispose of dredged materials to the sites specifically designated for both the type (dry or wet) and volume of dredged material. Comply with the placement plan limits and volumes defined in the USACE permit if hydraulic dredging methods are used. Do not deposit dredged material in unauthorized locations. Comply with rules and regulations of Federal, State, and local agencies.

2. Propose through the submittal process a disposal method employing an approved disposal site. The disposal methods and site(s) must comply with all applicable Federal, State, and local regulations. The Owner will obtain all required Federal, State, and local permits required for the disposal. All costs associated with the disposal method must be included in the bid price. Submit in the proposed dredging plan a description in detail of the disposal site, permits required, acceptance of dredged material, and procedures for approval.

3. Once placement operations are completed for hydraulic dredging, remove the boards on the outlet structure of the containment dike at a proper rate to allow drainage of the hydraulic fill. Maintain confined areas in operational condition until completion and acceptance of the Work in this Contract.

4. Wet material to be disposed of in USACE approved disposal area. Dry materials to be reused onsite if the material meets specifications.

E. Disposal Areas

1. The Contractor shall comply with the placement plan limits and volumes as indicated in the permit. The deposit of excavated material in unauthorized locations is forbidden. The Contractor shall comply with the rules and regulations of Federal, State, and local agencies as well as those of the licensed placement facility operations.

3.5 INTERFERENCE WITH NAVIGATION

A. Minimize interference with the use of the Sabine-Neches Ship Channel and passages. Consult with the Owner's Representative prior to shifting or moving of dredges or the interruption of dredging operations to accommodate the movement of vessels and floating equipment, if such accommodation is necessary.

B. Interruption of Operations: If dredging operations are interrupted due to the movement of vessels or floating equipment, inform the Owner's Representative as soon as such interruption occurs.

C. Lights: Each night, between sunset and sunrise and during periods of restricted visibility, provide lights for floating plants, pipelines, ranges, and markers. Also, provide lights for buoys that could endanger or obstruct navigation. Lighting shall conform to United States Coast Guard requirements for visibility and color.

D. Audible Warning Devices: Provide two methods of audible warning on every vessel for use in restricted visibility such as fog.

3.6 RANGES, GAUGES, AND LINES

A. Furnish, set, and maintain ranges, buoys, and markers needed to define the work and to facilitate inspection. Establish and maintain gauges in locations observable from each part of the work so that the depth may be determined. Suspend dredging when the gauges or ranges cannot be seen or followed. The Owner's Representative will furnish, upon request, survey lines, points, and elevations necessary for the setting of ranges, gauges, and buoys. However, the Owner's Representative makes no representation or warranty with respect to the accuracy or completeness of any such information.

3.7 PLANT

A. Maintain the plant, scows, comings, barges, pipelines, and associated equipment to meet the requirements of the work. Promptly repair leaks or breaks along the pipeline. Remove dredged material placed due to leaks and breaks.

B. ~~Material barges shall be watertight; overflow of barges will not be allowed, and s~~Decanting of water from barges is acceptable provided that the water quality is not adversely affected and the work is in accordance with regulatory permits and environmental regulations. Split hull dump barges will not be permitted for the storage of material at the dredge or disposal site. Clamshell buckets must be enclosed at the top to prevent spillage of any dredged material.

C. Method of Communication: Provide a system of communication between the Owner's Representative and the dredge crew and the crews at the offloading and disposal areas.

D. Salvaged Material: Anchors, chains, and other articles of value brought to the surface during dredging operations are the property of the Contractor. Deposit off-site in a proper manner.

E. Safety of Structures: During the prosecution of work, assure the stability of building foundations, roads, riprap, and other structures lying on or adjacent to the site of work, insofar as structures may be jeopardized by dredging operations. Repair damage resulting from dredging operations at no cost to the Owner to the satisfaction of the Owner's Representative.

F. Plant Removal: Upon completion of the work, promptly remove plant including ranges, buoys, piles, and other markers or obstructions.

3.8 MEASUREMENT

A. Perform a pre-dredge hydrographic survey and post-dredge hydrographic surveyand have the surveys witnessed by the Owner's Representative. The Owner will employ its own Survey Crew or an Independent Surveyor at the Owner's discretion to perform post- dredge surveys for verification of the dredge quantities.

B. Method of Measurement

1. Measure the material removed and items associated with disposal ~~including silt fences, turbidity screens, and outfall structures~~ by cubic yard in place. Use a fathometer with high

frequency of 200 kHz or higher or side scan sonar with soundings taken before and after dredging. The Drawings represent existing conditions based on available information, but will be verified and corrected by soundings taken before dredging.

2. Take soundings by lead line, sonic methods, or both as determined by the Owner's Representative. Results of soundings by either or both methods will be the basis for payment. Areas sounded more than 30 days prior to dredging will be re-sounded when requested.

C. Monthly Estimates: Monthly estimates of work completed will be based on the results of soundings taken during the progress of work. Deductions will be made for dredging and disposal not in accordance with the Specifications.

3.9 FINAL EXAMINATION AND ACCEPTANCE

A. As soon as practicable after the completion of areas that in the opinion of the Owner's Representative will not be affected by further dredging operations, each area will be sounded by the Owner's Representative by sounding, sweeping, or both. Remove shoals and lumps by dragging the bottom or dredging. However, if the bottom is soft and the shoal areas form no material obstruction to navigation or ship operations, removal may be waived at the discretion of the Owner's Representative.

B. Notification will be made when soundings or sweepings for post dredge are to be made. The Owner's Representative will accompany the sounding or sweeping party and inspect the data and methods used in preparing the final estimate. When areas are found to be in a satisfactory condition and disposal is complete as specified, the work therein will be accepted as complete. Final estimates will be subject to deductions or corrections of deductions previously made because of excessive overdredging, dredging outside of authorized areas, or disposal of material in an unauthorized manner.

-- End of Section --

TABLE OF VARIABLE DIMENSIONS AND QUANTITIES FOR ONE HEADWALL (5)

Slope	Dia of Pipe (D)	Values for One Pipe						Values to be Added for Each Addt'l Pipe		
		W	X	Y	L	Reinf (Lbs)	Conc (CY) (1)	X and W	Reinf (Lbs)	Conc (CY) (1)
2:1	12"	4' - 7 1/2"	2' - 6"	2' - 10"	3' - 3 1/4"	88	0.6	1' - 9"	20	0.2
	15"	5' - 5 3/4"	2' - 9 1/2"	3' - 4"	3' - 10 1/4"	103	0.7	2' - 2"	24	0.3
	18"	6' - 4 1/4"	3' - 1"	3' - 10"	4' - 5"	124	0.9	2' - 8"	32	0.3
	21"	7' - 2 3/4"	3' - 4 1/2"	4' - 4"	5' - 0"	143	1.1	3' - 1"	43	0.4
	24"	8' - 2 1/2"	3' - 9 1/2"	4' - 10"	5' - 7"	164	1.3	3' - 7"	50	0.5
	27"	9' - 1"	4' - 1"	5' - 4"	6' - 2"	179	1.5	3' - 11"	56	0.6
	30"	9' - 11 1/2"	4' - 4 1/2"	5' - 10"	6' - 8 3/4"	203	1.7	4' - 4"	65	0.8
	33"	10' - 10"	4' - 8"	6' - 4"	7' - 3 3/4"	224	2.0	4' - 8"	71	0.9
	36"	11' - 8 1/4"	4' - 11 1/2"	6' - 10"	7' - 10 3/4"	249	2.2	5' - 1"	81	1.0
	42"	13' - 5 1/4"	5' - 6 1/2"	7' - 10"	9' - 0 1/2"	298	2.8	5' - 10"	97	1.3
	48"	15' - 9"	6' - 1 1/2"	9' - 4"	10' - 9 1/4"	360	3.8	6' - 7"	117	1.7
	54"	17' - 5 3/4"	6' - 8 1/2"	10' - 4"	11' - 11 1/4"	427	4.5	7' - 6"	151	2.1
	60"	19' - 2 3/4"	7' - 3 1/2"	11' - 4"	13' - 1"	481	5.3	8' - 3"	174	2.5
	66"	20' - 11 1/2"	7' - 10 1/2"	12' - 4"	14' - 3"	544	6.2	8' - 9"	194	2.9
	72"	22' - 8 1/2"	8' - 5 1/2"	13' - 4"	15' - 4 3/4"	601	7.1	9' - 4"	213	3.3
3:1	12"	6' - 3"	2' - 6"	4' - 3"	4' - 11"	118	0.8	1' - 9"	22	0.2
	15"	7' - 5"	2' - 9 1/2"	5' - 0"	5' - 9 1/4"	137	1.1	2' - 2"	28	0.3
	18"	8' - 6 3/4"	3' - 1"	5' - 9"	6' - 7 3/4"	170	1.3	2' - 8"	37	0.5
	21"	9' - 8 3/4"	3' - 4 1/2"	6' - 6"	7' - 6"	195	1.6	3' - 1"	48	0.6
	24"	11' - 0"	3' - 9 1/2"	7' - 3"	8' - 4 1/2"	227	2.0	3' - 7"	58	0.7
	27"	12' - 2"	4' - 1"	8' - 0"	9' - 2 3/4"	251	2.3	3' - 11"	67	0.8
	30"	13' - 4"	4' - 4 1/2"	8' - 9"	10' - 1 1/4"	293	2.7	4' - 4"	77	1.0
	33"	14' - 5 3/4"	4' - 8"	9' - 6"	10' - 11 3/4"	318	3.1	4' - 8"	84	1.2
	36"	15' - 7 3/4"	4' - 11 1/2"	10' - 3"	11' - 10"	351	3.5	5' - 1"	96	1.4
	42"	17' - 11 1/2"	5' - 6 1/2"	11' - 9"	13' - 6 3/4"	432	4.5	5' - 10"	119	1.7
	48"	21' - 1 3/4"	6' - 1 1/2"	14' - 0"	16' - 2"	537	6.1	6' - 7"	146	2.3
	54"	23' - 5 1/2"	6' - 8 1/2"	15' - 6"	17' - 10 3/4"	630	7.3	7' - 6"	186	2.9
	60"	25' - 9 1/4"	7' - 3 1/2"	17' - 0"	19' - 7 1/2"	719	8.7	8' - 3"	219	3.4
	66"	28' - 1"	7' - 10 1/2"	18' - 6"	21' - 4 1/4"	811	10.1	8' - 9"	242	3.9
	72"	30' - 4 3/4"	8' - 5 1/2"	20' - 0"	23' - 1 1/4"	924	11.7	9' - 4"	272	4.4
4:1	12"	7' - 10 3/4"	2' - 6"	5' - 8"	6' - 6 1/2"	148	1.1	1' - 9"	24	0.3
	15"	9' - 4"	2' - 9 1/2"	6' - 8"	7' - 8 1/2"	181	1.5	2' - 2"	32	0.4
	18"	10' - 9 1/2"	3' - 1"	7' - 8"	8' - 10 1/4"	221	1.9	2' - 8"	42	0.5
	21"	12' - 2 3/4"	3' - 4 1/2"	8' - 8"	10' - 0"	260	2.3	3' - 1"	57	0.7
	24"	13' - 9 1/2"	3' - 9 1/2"	9' - 8"	11' - 2"	301	2.8	3' - 7"	67	0.9
	27"	15' - 3"	4' - 1"	10' - 8"	12' - 3 3/4"	334	3.3	3' - 11"	77	1.0
	30"	16' - 8 1/4"	4' - 4 1/2"	11' - 8"	13' - 5 3/4"	385	3.8	4' - 4"	89	1.3
	33"	18' - 1 3/4"	4' - 8"	12' - 8"	14' - 7 1/2"	425	4.5	4' - 8"	101	1.4
	36"	19' - 7"	4' - 11 1/2"	13' - 8"	15' - 9 1/4"	472	5.1	5' - 1"	115	1.7
	42"	22' - 5 3/4"	5' - 6 1/2"	15' - 8"	18' - 1"	583	6.5	5' - 10"	141	2.1
	48"	26' - 6 1/4"	6' - 1 1/2"	18' - 8"	21' - 6 3/4"	730	8.9	6' - 7"	175	2.8
	54"	29' - 5"	6' - 8 1/2"	20' - 8"	23' - 10 1/4"	875	10.7	7' - 6"	226	3.6
	60"	32' - 3 3/4"	7' - 3 1/2"	22' - 8"	26' - 2"	996	12.7	8' - 3"	264	4.3
	66"	35' - 2 1/2"	7' - 10 1/2"	24' - 8"	28' - 5 3/4"	1,140	14.9	8' - 9"	300	4.9
	72"	38' - 1 1/4"	8' - 5 1/2"	26' - 8"	30' - 9 1/2"	1,297	17.3	9' - 4"	334	5.6
6:1	12"	11' - 2"	2' - 6"	8' - 6"	9' - 9 3/4"	224	1.9	1' - 9"	28	0.4
	15"	13' - 2 1/4"	2' - 9 1/2"	10' - 0"	11' - 6 1/2"	268	2.5	2' - 2"	37	0.5
	18"	15' - 2 1/2"	3' - 1"	11' - 6"	13' - 3 1/4"	330	3.2	2' - 8"	50	0.7
	21"	17' - 2 3/4"	3' - 4 1/2"	13' - 0"	15' - 0 1/4"	387	3.9	3' - 1"	69	0.9
	24"	19' - 4 1/2"	3' - 9 1/2"	14' - 6"	16' - 9"	453	4.8	3' - 7"	80	1.2
	27"	21' - 4 3/4"	4' - 1"	16' - 0"	18' - 5 3/4"	512	5.7	3' - 11"	96	1.4
	30"	23' - 5 1/4"	4' - 4 1/2"	17' - 6"	20' - 2 1/2"	593	6.7	4' - 4"	110	1.7
	33"	25' - 5 1/2"	4' - 8"	19' - 0"	21' - 11 1/4"	675	7.8	4' - 8"	127	2.0
	36"	27' - 5 3/4"	4' - 11 1/2"	20' - 6"	23' - 8"	735	9.0	5' - 1"	144	2.3
	42"	31' - 6 1/4"	5' - 6 1/2"	23' - 6"	27' - 1 1/2"	922	11.5	5' - 10"	179	3.0
	48"	37' - 3 1/2"	6' - 1 1/2"	28' - 0"	32' - 4"	1,191	15.9	6' - 7"	231	4.0
	54"	41' - 4 1/4"	6' - 8 1/2"	31' - 0"	35' - 9 1/2"	1,424	19.2	7' - 6"	300	5.0
	60"	45' - 4 3/4"	7' - 3 1/2"	34' - 0"	39' - 3"	1,631	22.9	8' - 3"	353	6.0

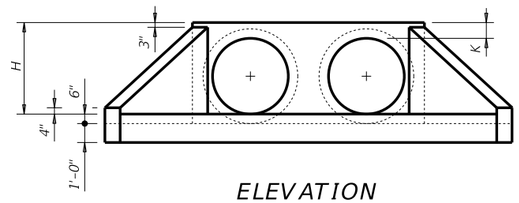

ELEVATION

(Showing dimensions.)

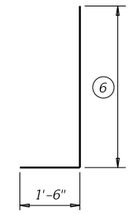

BARS V

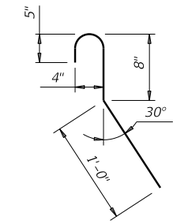

BARS CL

(Length = 2'-5")

TABLE OF (5) REINFORCING STEEL

Bar	Size	Spa	No.
A	#4	1' - 0"	~
B	#3	1' - 6"	~
C	#4	1' - 0"	~
D	#3	1' - 0"	~
E	#5	~	4
F	#5	~	~
G	#3	~	2
S	#4	~	6
V	#4	1' - 0"	~
W	#5	~	4

TABLE OF CONSTANT DIMENSIONS

Dia of Pipe (D)	G	K (4)	H
12"	0' - 9"	1' - 0"	2' - 0"
15"	0' - 11"	1' - 0"	2' - 3"
18"	1' - 2"	1' - 0"	2' - 6"
21"	1' - 4"	1' - 0"	2' - 9"
24"	1' - 7"	1' - 0"	3' - 0"
27"	1' - 8"	1' - 0"	3' - 3"
30"	1' - 10"	1' - 0"	3' - 6"
33"	1' - 11"	1' - 0"	3' - 9"
36"	2' - 1"	1' - 0"	4' - 0"
42"	2' - 4"	1' - 0"	4' - 6"
48"	2' - 7"	1' - 3"	5' - 3"
54"	3' - 0"	1' - 3"	5' - 9"
60"	3' - 3"	1' - 3"	6' - 3"
66"	3' - 3"	1' - 3"	6' - 9"
72"	3' - 4"	1' - 3"	7' - 3"

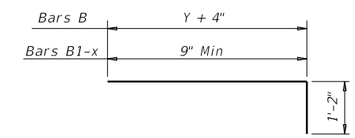

BARS B and B1-x

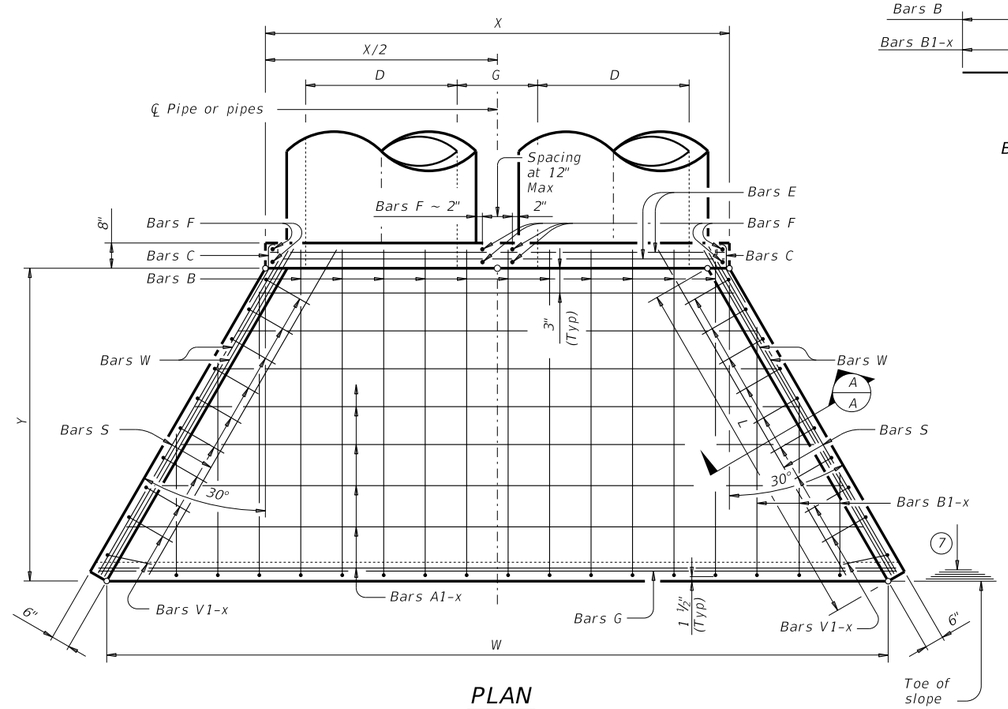

PLAN

(1) Quantities shown are for concrete pipe and will increase slightly for metal pipe installations.

(2) For vehicle safety, construct curbs no more than 3" above finished grade. Reduce curb heights, if necessary, to meet these requirements. No changes will be made in quantities and no additional compensation will be allowed for this work.

(3) Provide a 1'-0" footing as shown where required to maintain 4" minimum cover for pipes.

(4) Dimensions shown are usual and maximum.

(5) Quantities shown are for one structure end only (one headwall).

(6) Min Length = 6" + 3" x $\left(\frac{12 \times H - 7}{12 \times L}\right)$

Max Length = 12 x H - 3" x $\left(\frac{12 \times H - 7}{12 \times L}\right)$ - 1"

(7) Lengths of wings based on SL:1 slope along this line.

MATERIAL NOTES:

Provide Grade 60 reinforcing steel.
Provide Class C concrete (f'c = 3,600 psi).

GENERAL NOTES:

Designed according to AASHTO LRFD Bridge Design Specifications.

Do not mount bridge rails of any type directly to these culvert headwalls.

This standard may not be used for wall heights, H, exceeding the values shown.

Cover dimensions are clear dimensions, unless noted otherwise. Reinforcing dimensions are out-to-out of bars.

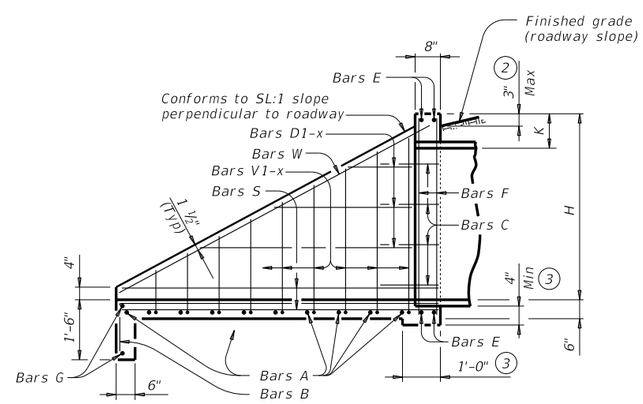

TYPICAL WING ELEVATION

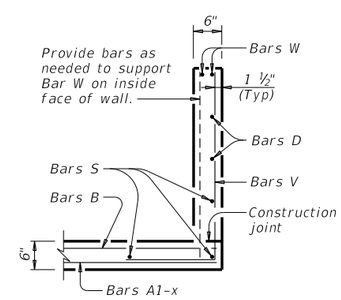

SECTION A-A

Texas Department of Transportation

Bridge Division Standard

CONCRETE HEADWALLS WITH FLARED WINGS FOR 0° SKEW PIPE CULVERTS

CH-FW-0

FILE: chfw00se-20.dgn	DN: TxDOT	CK: TxDOT	DW: TxDOT	CK: TxDOT
©TxDOT February 2020	CONT	SECT	JOB	HIGHWAY
REVISIONS	DIST		COUNTY	SHEET NO.

DISCLAIMER:
The use of this standard is governed by the "Texas Engineering Practice Act". No warranty of any kind is made by TxDOT for any purpose whatsoever. TxDOT assumes no responsibility for the conversion of this standard to other formats or for incorrect results or damages resulting from its use.

DATE:
FILE:

Port of Port Arthur Navigation District of Jefferson County, Texas

POLICY DIRECTIVE ON DIVERSITY IN CONTRACTING

Adopted JUNE 24, 2020

SECTION 1. Purpose.

The Board of Commissioners of the Port of Port Arthur have determined a need to increase the number of local, minority, veteran and women owned businesses utilized on Port contracts. The purpose of this policy directive is to increase the utilization of Port revenues from taxes and operations to assist local, minority, veteran and women owned businesses by providing increased opportunities for participation in contracting for public works, consulting services, supplies, material, equipment, and other services required by the Port.

SECTION 2. Definitions.

For the purposes of this policy directive:

"Affirmative efforts" means documented reasonable attempts in good faith to contract with minority, veteran and women owned businesses.

"Availability" or "available" means a business that is interested in and capable of performing the work within the time frame required and to the quality specified in the solicitation and contract.

"Capability" or "capable" means that a business appears able to perform a commercially useful function in performance of the work.

"Commercially useful function" means the performance of real and actual services in the discharge of any contractual endeavor.

"Contract" means an agreement for public works, consulting services, supplies, material, equipment, or other services.

"Contractor" means a business that has a contract with the Port.

"Local" means within the boundaries of the Port of Port Arthur Navigation District of Jefferson County, Texas.

"Local Plus" means within the nine county region comprised of Jefferson, Orange, Hardin, Jasper, Newton, Liberty, Tyler and Chambers counties, as well as the Bolivar Peninsula area of Galveston County.

"Relevant demographic data" is defined as, but not limited to, Asian-Pacific Americans, Black Americans, Hispanic Americans, Native Americans, Asian, and Women, and other characteristic information related to a business owner's

sexual orientation, sex/gender, race, ethnicity, physical ability, or veteran status as self-reported and/or certified by another government entity, as deemed necessary or relevant to eliminating disparity in Port contracting.

"Utilization" is defined as both the percent of contracting dollars paid to MVW firms as well as the number of MVW firms under contract.

"Minority, veteran, or women owned business" (MVW) means a business that is at least 51 percent owned and controlled by minorities, veterans and/or women (including, but not limited to Asian-Pacific Americans, Black Americans, Hispanic Americans, Native Americans, Asian, Service-Disabled Veterans, and Women, and other characteristic information related to a business owner's sexual orientation, sex/gender, race, ethnicity, physical ability, or veteran status as self-reported and/or certified by another government entity, as deemed necessary or relevant to eliminating disparity in Port contracting).

SECTION 3. Scope and Applicability.

This policy directive shall apply to all types of procurement contracts with the Port, including construction and consulting contracts, purchased goods, and services.

SECTION 4. Responsibilities.

The Board of Commissioners shall establish goals to increase MVW utilization for the Executive Director and staff in Port contracts and shall:

A. Expand opportunities for MVW firms across Port functions, wherever practicable;

B. Pursue the goal to substantially increase the number of MVW firms that contract with the Port and thereby substantially increase the percentage of dollars spent on MVW contracts, effective immediately upon the adoption of this policy directive;

C. Within 120 days of adoption of this policy directive, develop a Diversity in Contracting Program that identifies affirmative efforts to afford MVW owned businesses the maximum practicable opportunity to participate in Port contracts;

D. Incorporate the MVW goals into the Port's Diversity in Contracting Program to the fullest extent reasonable, including incorporation into scorecards, reports, and project plan updates. The Port shall prepare and publish an annual report each year entitled "Port of Port Arthur Diversity in Contracting Annual Report";

E. Establish and improve outreach efforts to increase and sustain MVW participation in Port contracting; and

F. Take affirmative efforts to assure equality of contracting opportunity through the development and application of inclusion plans or other tools as necessary.

SECTION 5. Policy.

A. The Port's Diversity in Contracting Program shall include:

(1) Responsibilities, policies, practices, and processes that can improve the Port procurement and contracting processes to provide a more receptive environment for the utilization of MVW firms, and

to ensure that businesses and contractors of all tiers working on Port contracts and subcontracts utilize MVW firms, wherever feasible or as required;

(2) Development of a standard procedure for the Port-wide MVW goal setting, and collection and reporting of relevant demographic data to be stored in a central database;

(3) Identify categories of contracts that will require MVW inclusion plans and other tools that will be applied to other categories of contracts Port-wide;

(4) Clear lines of responsibility and accountability for implementation of the MVW program; and

(5) Make MVW goal-setting and affirmative implementation efforts part of the annual performance evaluation for each Port department head/supervisor and require standardized MVW program training, implementation, and coordination for all department leaders and their MVW representatives.

B. The Port's Diversity in Contracting Annual Report shall include:

(1) The Port's prior year increase in utilization of MVWs to reduce disparity in Port contracting; and

(2) The achievement of goals by department for MVW utilization based on:

(a) Each Port department head/supervisor's review of future procurements to identify available firms on upcoming contracts to create a utilization goal that is justifiable, bold, and challenging; and

(b) Construction goals based on historic utilization plus an established percentage, until such time that a disparity study or other valid internal data can demonstrate a reasonable level of utilization.

C. To improve inclusion and outreach to improve and sustain MVW participation and to reduce disparity in Port contracting, the Port shall:

(1) Support training and assistance to Port staff to increase participation in outreach and to learn about the internal and external resources available to include MVW firms in the Port's procurement and contracting;

(2) Improve and expand technical assistance, including MVW certification, business development, training, and mentoring programs for MVW firms to enhance bidding expertise and promote greater coordination with advocacy organizations, businesses, individuals, and public agencies and other Port departments;

(3) Create opportunities for members of the contracting and vendor community, Port, and other stakeholders to work collaboratively on recommendations for the Port to more effectively use the directives in this policy directive;

(4) Assist contractors desiring to bid on Port contracts to comply with the affirmative efforts provisions for such contract, and offer information as to organizations and agencies available to

assist such contractors in recruiting, mentoring, training, or otherwise preparing potential subcontractors; and

(5) Cooperate and establish formal and/or informal partnerships and mutual cooperation with other public agencies to carry out the purposes of this policy directive, as needed.

D. Affirmative efforts to assure equality of contracting opportunity required:

(1) Develop procurement tools, such as MVW inclusion plans, and require bidders and proposers to comply with the MVW solicitation requirement in order to improve and sustain participation of MVW in Port contracts;

(2) Identify and implement a Port-wide method to regularly monitor and measure the Port MVW program and attainment of goals by contractors;

(3) Establish goals for participation of MVW owned businesses in a particular Port contract on a case-by-case basis;

(4) Work closely with other departments to ensure all policies, practices, and processes are consistent and complementary to make it easier for MVW firms to pursue Port contracts; and

(5) Review certifications and determine whether vendors meet program requirements.

E. Affirmative efforts in subcontracting:

(1) All contractors, including MVW firms, shall actively solicit bids for subcontracts to qualified, available, and capable MVW businesses to perform commercially useful functions;

(2) Contractors shall consider the grant of subcontracts to MVW bidders on the basis of substantially equal proposals in the light most favorable to MVW businesses;

(3) At the request of the relevant Port department, when inclusion plans are required, contractors shall furnish evidence of the contractor's compliance with the Port's requirements for MVW solicitation and will submit evidence of compliance with this section as part of any bid.

(4) Contractors shall provide records necessary to document affirmative efforts to subcontract with MVW businesses on Port contracts;

(5) At any time during a contract in which an inclusion plan is required, Port shall request and contractors shall furnish evidence of the contractor's compliance with these requirements of MVW solicitation and affirmative efforts to subcontract with MVW businesses;

(6) Compliance with all requirements and past performance under this policy directive may be included in the evaluation of future procurements; and

(7) In applying the provisions of this policy directive to contracts funded in whole or in part with federal funds and subject to 49 CFR Part 23, Subpart D, regarding Airport Concessions Disadvantaged Business Enterprises (ACDBE) or 49 CFR 26, Subpart C, regarding Disadvantaged Business Enterprises (DBE), references to Women and Minority Businesses shall also include federally recognized ACDBEs

or DBEs. In the event of a conflict between the provisions of this chapter, or the rules implementing this policy directive, and the requirements of 49 CFR 26, Subpart C, or 49 CFR Part 23, Subpart D, or any other superseding applicable federal statute or regulation, the provisions of the federal statute or regulation shall control.

F. Expanding Opportunity.

(1) The Port shall immediately commence review and recommend measures to expand opportunities for MVW firms in other Port enterprise opportunities, for example real estate leases, to encourage and promote access to Port facilities by MVW firms.

SECTION 6. Local Preference.

A. To be deemed a Local business or Local Plus business in this Program, businesses must first successfully complete Registration and provide other documentation as may be reasonably required by the Port.

B. A Local business means a business with its principal place of business within the Port of Port Arthur Navigation District, Jefferson County, Texas.

C. A Local Plus business means a business with its principal place of business within Jefferson, Orange, Hardin, Jasper, Newton, Liberty, Tyler and Chambers counties, as well as the Bolivar Peninsula area of Galveston County in the State of Texas.

D. Principal place of business means the business must:

(1) Be headquartered within the limits of the applicable jurisdiction as stated in A. or B. above; or

(2) Have an established place or places of business within the limits of the applicable jurisdiction in A. or B. above from which 20% or more of the entity's workforce are regularly based, and from which a substantial role in the entity's performance of a commercially useful function or a substantial part of its operations is conducted. A location utilized solely as a post office box, mail drop or telephone message center or any combination thereof, with no other substantial work function, shall not be construed as a principal place of business.

E. Headquartered means the location where an entity's leadership directs, controls, and coordinates the entity's activities.

F. Local Preference may be appropriate for contracts related to:

(a) any activity or matter incidental to the advertising, development, or promotion of the Port district or its ports, waterways, harbors, or terminals;

(b) furthering the general welfare of the Port district and its facilities; or

(c) the betterment of the Port district's relations with steamship and rail lines, shippers, consignees of freight, governmental officials, or others interested or sought to be interested in the ports, waterways, harbors, or terminals.

SECTION 7. Historically Underutilized Businesses (HUB).

A. A business submitting a bid under the HUB category for a Port project must obtain a HUB Certification from the State of Texas prior to submission.

B. To be eligible for HUB certification in the State of Texas, a business must:

(1) Be a U.S. citizen;

(2) Be a for-profit entity that has not exceeded the size standard prescribed by 34 TAC §20.294 and has its principal place of business in Texas; and

(3) Be at least 51% owned by an Asian Pacific American, Black American, Hispanic American, Native American, American woman and/or a Service Disabled Veteran with a Service related disability of 20% or greater, who resides in Texas and actively participates in the control, operations and management of the entity's affairs.

SECTION 8. Veteran Owned Businesses.

A. A business submitting a bid under the Veteran Owned business category for a Port project must complete a Veteran Owned business certification packet from the Port prior to submission.

B. A Veteran Owned business must be at least 51% owned by one or more veterans as defined in 38 USC 101(2).

SECTION 9. Program Evaluation and Audit.

A. The Executive Director or his or her designee shall periodically monitor and report benchmarks and metrics to evaluate the Port's Diversity in Contracting Program, including:

(1) Incorporation of these MVW goals into the Port's procurement policies and plans to the fullest extent reasonable, including incorporation into scorecards, reports, and project plan updates.

(2) Specific measures the Port will undertake to increase the participation of MVW firms and to reduce disparities, including the number of events or outreach activities conducted to ensure responsiveness to bid opportunities.

(3) Progress towards specific department MVW utilization goals, including the number of opportunities a department has available, the goals established for those opportunities and the actual utilization, including periodic review of disparity study results, to determine reasonableness of goals.

(4) Data reporting using the standard procedure identified in the MVW program for the Port-wide collection and reporting of relevant demographic data including percent of project dollars spent, number of businesses, and types of procurements.

(5) Preparation and publication of the Port's Diversity in Contracting Annual Report.

B. The Port's Director of Accounting shall include the Diversity in Contracting Program in the Port's annual business plan to monitor and report on adherence to this policy and establish compliance measures for future years as the Director of Accounting deems appropriate.

SECTION 10. Fiscal Implications.

Fiscal implications shall be reviewed by the Executive Director annually, at a minimum, to ensure that implementation of this policy directive is adequately resourced and shall submit a budget request as appropriate.

#13

PORT OF PORT ARTHUR

2020 - Port of Port Arthur Diversity in Contracting Annual Report

Port of Port Arthur Navigation District of Jefferson County, Texas

For the Calendar Year Ended December 31, 2020

PORT OF PORT ARTHUR

2020 - Port of Port Arthur Diversity in Contracting Annual Report

Report Basis

This is a report from port staff to the Board of Commissioners as a requirement of the Diversity in Contracting Policy. Adopted formally on June 24, 2020 requires the development of an annual report. This report, delivered January 20, 2021 should be considered an interim with considerable detail and updates to follow over the next few months.

Survey Data

Prior to the adoption, port staff began an effort to establish base line numbers to determine policy effectiveness. Master vendor lists were compiled and updated, researching some 5 years of information. Today the port is undergoing an outreach on vendors with activity in the preceding 2 years. A questionnaire was sent to approximately 260 vendors. The questionnaire updates relevant vendor information including if the business is considered as Local, Local Plus or Regional. The survey also seeks, on a voluntary basis, identifying the business status as Minority, Woman, Disabled, Veteran or a combination thereof.

A second part of the questionnaire asks for information about certifications, e.g. Minority/Women Owned Business Enterprise, MWBE; Historically Underutilized Business, HUB; and/or Disadvantaged Business Enterprise, DBE. We also offer resource information on how to apply for MWBE, HUB and DBE certifications.

We are early in the survey with self-reporting of four minority, twelve women, and eight veteran owned businesses. Five businesses have self-reported as holding MBWE certifications and four that reported as be a HUB. Responses are arriving daily and we plan follow-up correspondence contact to increase the response rate. Similarly, we plan monthly updates to the Board of Commissioners as we receive more information. To date the port reached out to active vendors, 260 to identify minority, women, disabled and veteran owned business. We began the survey on January 8, 2021 and have received a total of 51 responses totaling approximately 21%. By our own estimates 47% of the vendors are in Jefferson County, with 22% of the total current vendors defined as local, meaning they are in the Port of Port Arthur Navigation District. As stated, we are early in the survey process and while this represents the annual report, port staff will report for the next few months the updated findings.

Outreach

The port has actively engaged local organizations and participated in monthly contractor meetings. Due to COVID some of the events were held virtually. Below are a few highlights.

October 2020: Attended PACOC – Contractor Outreach Program. Delivered report on upcoming projects and highlighted the Diversity in Contracting program. Given size of audience, 120+ contractors we chose to sponsor the next event.

November 11, 2020: The port sponsored the Port Arthur Chamber of Commerce – Contractor Outreach Program, 120+ in attendance. The port rolled out the new logo and provided information on the Diversity in Contracting program. Several articles and postings appeared as a result including: Port

Arthur News, Beaumont Enterprise and The Examiner. Also posted by Chamber of various social media outlets.

December 2020: Article on port appeared in Beaumont Business Journal.

Employee Engagement – Port employees that are directly involved in making purchasing decisions for the port have received information and training on the program.

Existing and active contractors to the port were informed of the Diversity in Contracting effort. One additional outlet the port has involves potential vendors providing relevant information to a database linked to the port's website. www.portpa.com click on business and procurement. https://portpa.com/business/procurement/

The Port Commission at the December 20, 2020 board meeting amended its tax abatement policy to incorporate the Diversity in Contracting policy.

Results

Local vendor example: As a designated Strategic Seaport the port is involved in the movement of the US Military. In support of a 2020 training exercise the port hosted a number of support soldiers preparing for exercises at Ft Polk, LA. The port was also competitively selected to provide on-site meal service. Through the outreach, evaluation and pricing the port supported 4 local businesses in providing meals, totaling over $500,000. Each of the businesses self-identify as woman, minority and veteran owned businesses. A number of other local businesses were utilized for rentals, equipment, fuel, etc.

January 18, 2021

PORT OF PORT ARTHUR

Port of Port Arthur – Board of Commissioners
President Norris Simon
Vice President John Comeaux
Secretary/Treasurer Randy Martin
Commissioner Linda Turner Spears
Commissioner Raymond Johnson

Re: 2020 Annual Report on Diversity in Contracting Program

Board of Commissioners:

On behalf of port staff and counsel, I am pleased to provide as the policy requires the annual report on the Port of Port Arthur's Diversity in Contracting program. While informally a best management practice, in June 2020 the Board of Commissioners adopted a resolution and set forward a policy to identify Historically Underutilized Businesses, HUB. The commission further defined and expanded to specifically focus on local, women owned, minority owned, veteran owned, disabled veteran owned businesses.

I would like to thank Ms. Collin Sheldon for her individual efforts to facilitate policy development. Her research and enthusiasm aided the port throughout the process. I would also like to thank port staff and President Simon appointing the committee of Commissioners Martin and Spears. Port staff has continued its long-standing efforts to expand the role of various local vendors and contractors at the port. The policy provides milestones, goals, accountability and reporting requirements.

The following information provides an executive summary, resolution, policy and a variety of supporting information, statistics, dollar amounts, percentages to better describe the Port of Port Arthur's Diversity In Contracting Program.

While 2020 created its own special set of challenges I acknowledge the increase in targeted contractors by both percentage and dollar amount. Anecdotally, highlighted by $500,000 in port expenditures supporting 4 local restaurants all with addresses in the Port of Port Arthur Navigation District three of which are woman, minority or veteran owned.

Sincerely,

Larry Kelley
Port Director/CEO
Port of Port Arthur

Port of Port Arthur
221 Houston Avenue
P.O. Box 1428
Port Arthur, Texas, 77641
409.983.2011
portpa.com

RESOLUTION

A RESOLUTION of the Port of Port Arthur Navigation District of Jefferson County, Texas (the "Port") establishing a Diversity in Contracting Policy Directive to increase local, minority, veteran and women owned ("MVW") business opportunities.

WHEREAS, the Port is committed to increasing local economic opportunity, promoting social responsibility, and establishing partnerships within its communities; and

WHEREAS, the economic vitality of a community is strengthened and more resilient when opportunity is inclusive across diverse communities; and

WHEREAS, the Port is uniquely positioned to lead in efforts to provide a level platform to all businesses including MVW owned businesses to compete and succeed; and

WHEREAS, the Port seeks to affirmatively expand its efforts to increase MVW participation in Port contracts by providing resources, training and assistance to MVWs to bid on Port contracts; and

WHEREAS, the Board of Commissioners of the Port of Port Arthur believe there is a need to increase the number of MVW owned businesses utilized on Port contracts; and

WHEREAS, this Policy is being adopted to increase the Port's efforts to eliminate disparities and result in more equal, diverse, and inclusive opportunities for MVWs; and

WHEREAS, the Port seeks to establish and support a diverse workforce by improving diversity and inclusion focused on eliminating racial inequalities and identifying interventions for use in policy, program, and budget planning and implementation; and

WHEREAS, the Port is committed to its values of conducting business with the highest ethical standards and business practices reflect integrity, accountability, honesty, fairness and respect at all levels;

NOW, THEREFORE, BE IT RESOLVED by the Board of Port Commissioners as follows:

SECTION 1. The Diversity in Contracting Policy Directive as shown in Exhibit A is hereby established.

SECTION 2. This Policy Directive shall be labeled and catalogued as appropriate, together with subsequent policy directives, and shall be made readily available for use by Port staff and members of the public as a governance document of the Port of Port Arthur.

ADOPTED by the Board of Commissioners of the Port of Port Arthur at a duly noticed meeting thereof, held this 24 day of June, 2020 and duly authenticated in open session by the signatures of the Commissioners voting in favor thereof and the seal of the Commission.

COMMISSIONERS VOTING FOR THE RESOLUTIONS: Comeaux, Johnson, Martin, Simon, Spears

COMMISSIONERS VOTING AGAINST THE RESOLUTIONS: None

ABSENTEES AND ABSTENTIONS: NONE

Signature of Officer:

Name Printed: Norris J. Simon, Jr.

Title: President of Board of Commissioners

(seal)

Approved by Counsel:

Port of Port Arthur Navigation District of Jefferson County, Texas

POLICY DIRECTIVE ON DIVERSITY IN CONTRACTING

Adopted JUNE 24, 2020

SECTION 1. Purpose.

The Board of Commissioners of the Port of Port Arthur have determined a need to increase the number of local, minority, veteran and women owned businesses utilized on Port contracts. The purpose of this policy directive is to increase the utilization of Port revenues from taxes and operations to assist local, minority, veteran and women owned businesses by providing increased opportunities for participation in contracting for public works, consulting services, supplies, material, equipment, and other services required by the Port.

SECTION 2. Definitions.

For the purposes of this policy directive:

"Affirmative efforts" means documented reasonable attempts in good faith to contract with minority, veteran and women owned businesses.

"Availability" or "available" means a business that is interested in and capable of performing the work within the time frame required and to the quality specified in the solicitation and contract.

"Capability" or "capable" means that a business appears able to perform a commercially useful function in performance of the work.

"Commercially useful function" means the performance of real and actual services in the discharge of any contractual endeavor.

"Contract" means an agreement for public works, consulting services, supplies, material, equipment, or other services.

"Contractor" means a business that has a contract with the Port.

"Local" means within the boundaries of the Port of Port Arthur Navigation District of Jefferson County, Texas.

"Local Plus" means within the nine county region comprised of Jefferson, Orange, Hardin, Jasper, Newton, Liberty, Tyler and Chambers counties, as well as the Bolivar Peninsula area of Galveston County.

"Relevant demographic data" is defined as, but not limited to, Asian-Pacific Americans, Black Americans, Hispanic Americans, Native Americans, Asian, and Women, and other characteristic information related to a business owner's

sexual orientation, sex/gender, race, ethnicity, physical ability, or veteran status as self-reported and/or certified by another government entity, as deemed necessary or relevant to eliminating disparity in Port contracting.

"Utilization" is defined as both the percent of contracting dollars paid to MVW firms as well as the number of MVW firms under contract.

"Minority, veteran, or women owned business" (MVW) means a business that is at least 51 percent owned and controlled by minorities, veterans and/or women (including, but not limited to Asian-Pacific Americans, Black Americans, Hispanic Americans, Native Americans, Asian, Service-Disabled Veterans, and Women, and other characteristic information related to a business owner's sexual orientation, sex/gender, race, ethnicity, physical ability, or veteran status as self-reported and/or certified by another government entity, as deemed necessary or relevant to eliminating disparity in Port contracting).

SECTION 3. Scope and Applicability.

This policy directive shall apply to all types of procurement contracts with the Port, including construction and consulting contracts, purchased goods, and services.

SECTION 4. Responsibilities.

The Board of Commissioners shall establish goals to increase MVW utilization for the Executive Director and staff in Port contracts and shall:

A. Expand opportunities for MVW firms across Port functions, wherever practicable;

B. Pursue the goal to substantially increase the number of MVW firms that contract with the Port and thereby substantially increase the percentage of dollars spent on MVW contracts, effective immediately upon the adoption of this policy directive;

C. Within 120 days of adoption of this policy directive, develop a Diversity in Contracting Program that identifies affirmative efforts to afford MVW owned businesses the maximum practicable opportunity to participate in Port contracts;

D. Incorporate the MVW goals into the Port's Diversity in Contracting Program to the fullest extent reasonable, including incorporation into scorecards, reports, and project plan updates. The Port shall prepare and publish an annual report each year entitled "Port of Port Arthur Diversity in Contracting Annual Report";

E. Establish and improve outreach efforts to increase and sustain MVW participation in Port contracting; and

F. Take affirmative efforts to assure equality of contracting opportunity through the development and application of inclusion plans or other tools as necessary.

SECTION 5. Policy.

A. The Port's Diversity in Contracting Program shall include:

(1) Responsibilities, policies, practices, and processes that can improve the Port procurement and contracting processes to provide a more receptive environment for the utilization of MVW firms, and

to ensure that businesses and contractors of all tiers working on Port contracts and subcontracts utilize MVW firms, wherever feasible or as required;

(2) Development of a standard procedure for the Port-wide MVW goal setting, and collection and reporting of relevant demographic data to be stored in a central database;

(3) Identify categories of contracts that will require MVW inclusion plans and other tools that will be applied to other categories of contracts Port-wide;

(4) Clear lines of responsibility and accountability for implementation of the MVW program; and

(5) Make MVW goal-setting and affirmative implementation efforts part of the annual performance evaluation for each Port department head/supervisor and require standardized MVW program training, implementation, and coordination for all department leaders and their MVW representatives.

B. The Port's Diversity in Contracting Annual Report shall include:

(1) The Port's prior year increase in utilization of MVWs to reduce disparity in Port contracting; and

(2) The achievement of goals by department for MVW utilization based on:

(a) Each Port department head/supervisor's review of future procurements to identify available firms on upcoming contracts to create a utilization goal that is justifiable, bold, and challenging; and

(b) Construction goals based on historic utilization plus an established percentage, until such time that a disparity study or other valid internal data can demonstrate a reasonable level of utilization.

C. To improve inclusion and outreach to improve and sustain MVW participation and to reduce disparity in Port contracting, the Port shall:

(1) Support training and assistance to Port staff to increase participation in outreach and to learn about the internal and external resources available to include MVW firms in the Port's procurement and contracting;

(2) Improve and expand technical assistance, including MVW certification, business development, training, and mentoring programs for MVW firms to enhance bidding expertise and promote greater coordination with advocacy organizations, businesses, individuals, and public agencies and other Port departments;

(3) Create opportunities for members of the contracting and vendor community, Port, and other stakeholders to work collaboratively on recommendations for the Port to more effectively use the directives in this policy directive;

(4) Assist contractors desiring to bid on Port contracts to comply with the affirmative efforts provisions for such contract, and offer information as to organizations and agencies available to

assist such contractors in recruiting, mentoring, training, or otherwise preparing potential subcontractors; and

(5) Cooperate and establish formal and/or informal partnerships and mutual cooperation with other public agencies to carry out the purposes of this policy directive, as needed.

D. Affirmative efforts to assure equality of contracting opportunity required:

(1) Develop procurement tools, such as MVW inclusion plans, and require bidders and proposers to comply with the MVW solicitation requirement in order to improve and sustain participation of MVW in Port contracts;

(2) Identify and implement a Port-wide method to regularly monitor and measure the Port MVW program and attainment of goals by contractors;

(3) Establish goals for participation of MVW owned businesses in a particular Port contract on a case-by-case basis;

(4) Work closely with other departments to ensure all policies, practices, and processes are consistent and complementary to make it easier for MVW firms to pursue Port contracts; and

(5) Review certifications and determine whether vendors meet program requirements.

E. Affirmative efforts in subcontracting:

(1) All contractors, including MVW firms, shall actively solicit bids for subcontracts to qualified, available, and capable MVW businesses to perform commercially useful functions;

(2) Contractors shall consider the grant of subcontracts to MVW bidders on the basis of substantially equal proposals in the light most favorable to MVW businesses;

(3) At the request of the relevant Port department, when inclusion plans are required, contractors shall furnish evidence of the contractor's compliance with the Port's requirements for MVW solicitation and will submit evidence of compliance with this section as part of any bid.

(4) Contractors shall provide records necessary to document affirmative efforts to subcontract with MVW businesses on Port contracts;

(5) At any time during a contract in which an inclusion plan is required, Port shall request and contractors shall furnish evidence of the contractor's compliance with these requirements of MVW solicitation and affirmative efforts to subcontract with MVW businesses;

(6) Compliance with all requirements and past performance under this policy directive may be included in the evaluation of future procurements; and

(7) In applying the provisions of this policy directive to contracts funded in whole or in part with federal funds and subject to 49 CFR Part 23, Subpart D, regarding Airport Concessions Disadvantaged Business Enterprises (ACDBE) or 49 CFR 26, Subpart C, regarding Disadvantaged Business Enterprises (DBE), references to Women and Minority Businesses shall also include federally recognized ACDBEs

or DBEs. In the event of a conflict between the provisions of this chapter, or the rules implementing this policy directive, and the requirements of 49 CFR 26, Subpart C, or 49 CFR Part 23, Subpart D, or any other superseding applicable federal statute or regulation, the provisions of the federal statute or regulation shall control.

F. Expanding Opportunity.

(1) The Port shall immediately commence review and recommend measures to expand opportunities for MVW firms in other Port enterprise opportunities, for example real estate leases, to encourage and promote access to Port facilities by MVW firms.

SECTION 6. Local Preference.

A. To be deemed a Local business or Local Plus business in this Program, businesses must first successfully complete Registration and provide other documentation as may be reasonably required by the Port.

B. A Local business means a business with its principal place of business within the Port of Port Arthur Navigation District, Jefferson County, Texas.

C. A Local Plus business means a business with its principal place of business within Jefferson, Orange, Hardin, Jasper, Newton, Liberty, Tyler and Chambers counties, as well as the Bolivar Peninsula area of Galveston County in the State of Texas.

D. Principal place of business means the business must:

(1) Be headquartered within the limits of the applicable jurisdiction as stated in A. or B. above; or

(2) Have an established place or places of business within the limits of the applicable jurisdiction in A. or B. above from which 20% or more of the entity's workforce are regularly based, and from which a substantial role in the entity's performance of a commercially useful function or a substantial part of its operations is conducted. A location utilized solely as a post office box, mail drop or telephone message center or any combination thereof, with no other substantial work function, shall not be construed as a principal place of business.

E. Headquartered means the location where an entity's leadership directs, controls, and coordinates the entity's activities.

F. Local Preference may be appropriate for contracts related to:

(a) any activity or matter incidental to the advertising, development, or promotion of the Port district or its ports, waterways, harbors, or terminals;

(b) furthering the general welfare of the Port district and its facilities; or

(c) the betterment of the Port district's relations with steamship and rail lines, shippers, consignees of freight, governmental officials, or others interested or sought to be interested in the ports, waterways, harbors, or terminals.

SECTION 7. Historically Underutilized Businesses (HUB).

A. A business submitting a bid under the HUB category for a Port project must obtain a HUB Certification from the State of Texas prior to submission.

B. To be eligible for HUB certification in the State of Texas, a business must:

(1) Be a U.S. citizen;

(2) Be a for-profit entity that has not exceeded the size standard prescribed by 34 TAC §20.294 and has its principal place of business in Texas; and

(3) Be at least 51% owned by an Asian Pacific American, Black American, Hispanic American, Native American, American woman and/or a Service Disabled Veteran with a Service related disability of 20% or greater, who resides in Texas and actively participates in the control, operations and management of the entity's affairs.

SECTION 8. Veteran Owned Businesses.

A. A business submitting a bid under the Veteran Owned business category for a Port project must complete a Veteran Owned business certification packet from the Port prior to submission.

B. A Veteran Owned business must be at least 51% owned by one or more veterans as defined in 38 USC 101(2).

SECTION 9. Program Evaluation and Audit.

A. The Executive Director or his or her designee shall periodically monitor and report benchmarks and metrics to evaluate the Port's Diversity in Contracting Program, including:

(1) Incorporation of these MVW goals into the Port's procurement policies and plans to the fullest extent reasonable, including incorporation into scorecards, reports, and project plan updates.

(2) Specific measures the Port will undertake to increase the participation of MVW firms and to reduce disparities, including the number of events or outreach activities conducted to ensure responsiveness to bid opportunities.

(3) Progress towards specific department MVW utilization goals, including the number of opportunities a department has available, the goals established for those opportunities and the actual utilization, including periodic review of disparity study results, to determine reasonableness of goals.

(4) Data reporting using the standard procedure identified in the MVW program for the Port-wide collection and reporting of relevant demographic data including percent of project dollars spent, number of businesses, and types of procurements.

(5) Preparation and publication of the Port's Diversity in Contracting Annual Report.

B. The Port's Director of Accounting shall include the Diversity in Contracting Program in the Port's annual business plan to monitor and report on adherence to this policy and establish compliance measures for future years as the Director of Accounting deems appropriate.

SECTION 10. Fiscal Implications.

Fiscal implications shall be reviewed by the Executive Director annually, at a minimum, to ensure that implementation of this policy directive is adequately resourced and shall submit a budget request as appropriate.

PORT OF PORT ARTHUR

January 8, 2021

Dear Port of Port Arthur Vendor,

Wishing you a very happy 2021, the Port of Port Arthur appreciates our ongoing relationships with our vendors and we look forward to another successful year.

In order to update our records and assure compliance with Federal Tax Regulations, we respectfully ask that you complete and sign both an updated vendor information form and IRS Form W-9 as enclosed. These forms may be mailed or emailed back to us at Accounts Payable:

Port of Port Arthur- Accounts Payable
P.O. Box 1428
Port Arthur, Texas 77641
ap@portpa.com

Also, going forward please submit all invoices directly to the accounts payable address.

Should you have questions concerning this request, please contact me at 409-983-2011 or via email at rebecca@portpa.com.

Thank you for your prompt response,

Rebecca Underhill

Rebecca Underhill, CPA
Director of Accounting

Port of Port Arthur
221 Houston Avenue
P.O. Box 1428
Port Arthur, Texas 77641
409.983.2011
portpa.com

Port of Port Arthur Vendor Information Form

All Invoices should be submitted to:
Port of Port Arthur - Accounts Payable
ap@portpa.com PO Box 1428 Port Arthur, Texas 77641 409-983-2011

Vendor Organization Name _____

Physical Address _____

Mailing Address _____

Vendor Reporting Form of Business (Check One)

___ Corporation ___ Partnership ___ Individual/Sole Proprietor ___ Government Agency/Non Profit

Vendor Taxpayer Identification Number / Social Security Number: _____

Subject to 1099 Reporting ? ___ (Yes/No)

Vendor Contact Information

	Principal Sales Contact	**Billing Contact**
Name	_____	_____
Phone #	_____	_____
Email	_____	_____

Principal Line of Business - Provide a brief description of the products / services provided

_____

_____

The Port of Port Arthur Navigation District has established a *Diversity in Contracting Policy* to increase local, minority, veteran and women owned business opportunities. The following information will assist the Port in monitoring this progress.

Vendor Ownership Status - check all that apply

Minority _____ Women _____

Disabled _____ Veteran _____

Check all certifications that are held by the organization

Minority/Women Owned Business Enterprise (MWBE) ___

Historically Underutilized Business (HUB) ___

Disadvantaged Business Enterprise (DBE) ___

Vendors that may qualify as MWBE/HUB/DBE and are not certified may receive assistance with this process by contacting:

Lamar State College Port Arthur Small Business Development Center 409-984-6531
1401 Procter Street https://www.sbdc.uh.edu/sbdc/Lamar_State_SBDC.asp
Port Arthur, Texas 77640

Information Submitted by: _____ Date _____

Form **W-9**
(Rev. October 2018)
Department of the Treasury
Internal Revenue Service

Request for Taxpayer Identification Number and Certification

▶ Go to *www.irs.gov/FormW9* for instructions and the latest information.

Give Form to the requester. Do not send to the IRS.

Print or type. See Specific Instructions on page 3.

1 Name (as shown on your income tax return). Name is required on this line; do not leave this line blank.

2 Business name/disregarded entity name, if different from above

3 Check appropriate box for federal tax classification of the person whose name is entered on line 1. Check only one of the following seven boxes.

☐ Individual/sole proprietor or single-member LLC ☐ C Corporation ☐ S Corporation ☐ Partnership ☐ Trust/estate

☐ Limited liability company. Enter the tax classification (C=C corporation, S=S corporation, P=Partnership) ▶ _____

Note: Check the appropriate box in the line above for the tax classification of the single-member owner. Do not check LLC if the LLC is classified as a single-member LLC that is disregarded from the owner unless the owner of the LLC is another LLC that is **not** disregarded from the owner for U.S. federal tax purposes. Otherwise, a single-member LLC that is disregarded from the owner should check the appropriate box for the tax classification of its owner.

☐ Other (see instructions) ▶

4 Exemptions (codes apply only to certain entities, not individuals; see instructions on page 3):

Exempt payees code (if any) _____

Exemption from FATCA reporting code (if any) _____

(Applies to accounts maintained outside the U.S.)

5 Address (number, street, and apt. or suite no.) See instructions.

Requester's name and address (optional)

6 City, state, and ZIP code

7 List account number(s) here (optional)

Part I Taxpayer Identification Number (TIN)

Enter your TIN in the appropriate box. The TIN provided must match the name given on line 1 to avoid backup withholding. For individuals, this is generally your social security number (SSN). However, for a resident alien, sole proprietor, or disregarded entity, see the instructions for Part I, later. For other entities, it is your employer identification number (EIN). If you do not have a number, see *How to get a TIN*, later.

Note: If the account is in more than one name, see the instructions for line 1. Also see *What Name and Number To Give the Requester* for guidelines on whose number to enter.

Social security number

☐☐☐ – ☐☐ – ☐☐☐☐

or

Employer identification number

☐☐ – ☐☐☐☐☐☐☐

Part II Certification

Under penalties of perjury, I certify that:

1. The number shown on this form is my correct taxpayer identification number (or I am waiting for a number to be issued to me); and
2. I am not subject to backup withholding because: (a) I am exempt from backup withholding, or (b) I have not been notified by the Internal Revenue Service (IRS) that I am subject to backup withholding as a result of a failure to report all interest or dividends, or (c) the IRS has notified me that I am no longer subject to backup withholding; and
3. I am a U.S. citizen or other U.S. person (defined below); and
4. The FATCA code(s) entered on this form (if any) indicating that I am exempt from FATCA reporting is correct.

Certification instructions. You must cross out item 2 above if you have been notified by the IRS that you are currently subject to backup withholding because you have failed to report all interest and dividends on your tax return. For real estate transactions, item 2 does not apply. For mortgage interest paid, acquisition or abandonment of secured property, cancellation of debt, contributions to an individual retirement arrangement (IRA), and generally, payments other than interest and dividends, you are not required to sign the certification, but you must provide your correct TIN. See the instructions for Part II, later.

Sign Here | **Signature of U.S. person ▶** | **Date ▶**

General Instructions

Section references are to the Internal Revenue Code unless otherwise noted.

Future developments. For the latest information about developments related to Form W-9 and its instructions, such as legislation enacted after they were published, go to *www.irs.gov/FormW9*.

Purpose of Form

An individual or entity (Form W-9 requester) who is required to file an information return with the IRS must obtain your correct taxpayer identification number (TIN) which may be your social security number (SSN), individual taxpayer identification number (ITIN), adoption taxpayer identification number (ATIN), or employer identification number (EIN), to report on an information return the amount paid to you, or other amount reportable on an information return. Examples of information returns include, but are not limited to, the following.

- Form 1099-INT (interest earned or paid)
- Form 1099-DIV (dividends, including those from stocks or mutual funds)
- Form 1099-MISC (various types of income, prizes, awards, or gross proceeds)
- Form 1099-B (stock or mutual fund sales and certain other transactions by brokers)
- Form 1099-S (proceeds from real estate transactions)
- Form 1099-K (merchant card and third party network transactions)
- Form 1098 (home mortgage interest), 1098-E (student loan interest), 1098-T (tuition)
- Form 1099-C (canceled debt)
- Form 1099-A (acquisition or abandonment of secured property)

Use Form W-9 only if you are a U.S. person (including a resident alien), to provide your correct TIN.

If you do not return Form W-9 to the requester with a TIN, you might be subject to backup withholding. See What is backup withholding, *later.*

By signing the filled-out form, you:

1. Certify that the TIN you are giving is correct (or you are waiting for a number to be issued),

2. Certify that you are not subject to backup withholding, or

3. Claim exemption from backup withholding if you are a U.S. exempt payee. If applicable, you are also certifying that as a U.S. person, your allocable share of any partnership income from a U.S. trade or business is not subject to the withholding tax on foreign partners' share of effectively connected income, and

4. Certify that FATCA code(s) entered on this form (if any) indicating that you are exempt from the FATCA reporting, is correct. See *What is FATCA reporting*, later, for further information.

Note: If you are a U.S. person and a requester gives you a form other than Form W-9 to request your TIN, you must use the requester's form if it is substantially similar to this Form W-9.

Definition of a U.S. person. For federal tax purposes, you are considered a U.S. person if you are:

- An individual who is a U.S. citizen or U.S. resident alien;
- A partnership, corporation, company, or association created or organized in the United States or under the laws of the United States;
- An estate (other than a foreign estate); or
- A domestic trust (as defined in Regulations section 301.7701-7).

Special rules for partnerships. Partnerships that conduct a trade or business in the United States are generally required to pay a withholding tax under section 1446 on any foreign partners' share of effectively connected taxable income from such business. Further, in certain cases where a Form W-9 has not been received, the rules under section 1446 require a partnership to presume that a partner is a foreign person, and pay the section 1446 withholding tax. Therefore, if you are a U.S. person that is a partner in a partnership conducting a trade or business in the United States, provide Form W-9 to the partnership to establish your U.S. status and avoid section 1446 withholding on your share of partnership income.

In the cases below, the following person must give Form W-9 to the partnership for purposes of establishing its U.S. status and avoiding withholding on its allocable share of net income from the partnership conducting a trade or business in the United States.

- In the case of a disregarded entity with a U.S. owner, the U.S. owner of the disregarded entity and not the entity;
- In the case of a grantor trust with a U.S. grantor or other U.S. owner, generally, the U.S. grantor or other U.S. owner of the grantor trust and not the trust; and
- In the case of a U.S. trust (other than a grantor trust), the U.S. trust (other than a grantor trust) and not the beneficiaries of the trust.

Foreign person. If you are a foreign person or the U.S. branch of a foreign bank that has elected to be treated as a U.S. person, do not use Form W-9. Instead, use the appropriate Form W-8 or Form 8233 (see Pub. 515, Withholding of Tax on Nonresident Aliens and Foreign Entities).

Nonresident alien who becomes a resident alien. Generally, only a nonresident alien individual may use the terms of a tax treaty to reduce or eliminate U.S. tax on certain types of income. However, most tax treaties contain a provision known as a "saving clause." Exceptions specified in the saving clause may permit an exemption from tax to continue for certain types of income even after the payee has otherwise become a U.S. resident alien for tax purposes.

If you are a U.S. resident alien who is relying on an exception contained in the saving clause of a tax treaty to claim an exemption from U.S. tax on certain types of income, you must attach a statement to Form W-9 that specifies the following five items.

1. The treaty country. Generally, this must be the same treaty under which you claimed exemption from tax as a nonresident alien.

2. The treaty article addressing the income.

3. The article number (or location) in the tax treaty that contains the saving clause and its exceptions.

4. The type and amount of income that qualifies for the exemption from tax.

5. Sufficient facts to justify the exemption from tax under the terms of the treaty article.

Example. Article 20 of the U.S.-China income tax treaty allows an exemption from tax for scholarship income received by a Chinese student temporarily present in the United States. Under U.S. law, this student will become a resident alien for tax purposes if his or her stay in the United States exceeds 5 calendar years. However, paragraph 2 of the first Protocol to the U.S.-China treaty (dated April 30, 1984) allows the provisions of Article 20 to continue to apply even after the Chinese student becomes a resident alien of the United States. A Chinese student who qualifies for this exception (under paragraph 2 of the first protocol) and is relying on this exception to claim an exemption from tax on his or her scholarship or fellowship income would attach to Form W-9 a statement that includes the information described above to support that exemption.

If you are a nonresident alien or a foreign entity, give the requester the appropriate completed Form W-8 or Form 8233.

Backup Withholding

What is backup withholding? Persons making certain payments to you must under certain conditions withhold and pay to the IRS 24% of such payments. This is called "backup withholding." Payments that may be subject to backup withholding include interest, tax-exempt interest, dividends, broker and barter exchange transactions, rents, royalties, nonemployee pay, payments made in settlement of payment card and third party network transactions, and certain payments from fishing boat operators. Real estate transactions are not subject to backup withholding.

You will not be subject to backup withholding on payments you receive if you give the requester your correct TIN, make the proper certifications, and report all your taxable interest and dividends on your tax return.

Payments you receive will be subject to backup withholding if:

1. You do not furnish your TIN to the requester,

2. You do not certify your TIN when required (see the instructions for Part II for details),

3. The IRS tells the requester that you furnished an incorrect TIN,

4. The IRS tells you that you are subject to backup withholding because you did not report all your interest and dividends on your tax return (for reportable interest and dividends only), or

5. You do not certify to the requester that you are not subject to backup withholding under 4 above (for reportable interest and dividend accounts opened after 1983 only).

Certain payees and payments are exempt from backup withholding. See *Exempt payee code*, later, and the separate Instructions for the Requester of Form W-9 for more information.

Also see *Special rules for partnerships*, earlier.

What is FATCA Reporting?

The Foreign Account Tax Compliance Act (FATCA) requires a participating foreign financial institution to report all United States account holders that are specified United States persons. Certain payees are exempt from FATCA reporting. See *Exemption from FATCA reporting code*, later, and the Instructions for the Requester of Form W-9 for more information.

Updating Your Information

You must provide updated information to any person to whom you claimed to be an exempt payee if you are no longer an exempt payee and anticipate receiving reportable payments in the future from this person. For example, you may need to provide updated information if you are a C corporation that elects to be an S corporation, or if you no longer are tax exempt. In addition, you must furnish a new Form W-9 if the name or TIN changes for the account; for example, if the grantor of a grantor trust dies.

Penalties

Failure to furnish TIN. If you fail to furnish your correct TIN to a requester, you are subject to a penalty of $50 for each such failure unless your failure is due to reasonable cause and not to willful neglect.

Civil penalty for false information with respect to withholding. If you make a false statement with no reasonable basis that results in no backup withholding, you are subject to a $500 penalty.

Criminal penalty for falsifying information. Willfully falsifying certifications or affirmations may subject you to criminal penalties including fines and/or imprisonment.

Misuse of TINs. If the requester discloses or uses TINs in violation of federal law, the requester may be subject to civil and criminal penalties.

Specific Instructions

Line 1

You must enter one of the following on this line; **do not** leave this line blank. The name should match the name on your tax return.

If this Form W-9 is for a joint account (other than an account maintained by a foreign financial institution (FFI)), list first, and then circle, the name of the person or entity whose number you entered in Part I of Form W-9. If you are providing Form W-9 to an FFI to document a joint account, each holder of the account that is a U.S. person must provide a Form W-9.

a. **Individual.** Generally, enter the name shown on your tax return. If you have changed your last name without informing the Social Security Administration (SSA) of the name change, enter your first name, the last name as shown on your social security card, and your new last name.

Note: ITIN applicant: Enter your individual name as it was entered on your Form W-7 application, line 1a. This should also be the same as the name you entered on the Form 1040/1040A/1040EZ you filed with your application.

b. **Sole proprietor or single-member LLC.** Enter your individual name as shown on your 1040/1040A/1040EZ on line 1. You may enter your business, trade, or "doing business as" (DBA) name on line 2.

c. **Partnership, LLC that is not a single-member LLC, C corporation, or S corporation.** Enter the entity's name as shown on the entity's tax return on line 1 and any business, trade, or DBA name on line 2.

d. **Other entities.** Enter your name as shown on required U.S. federal tax documents on line 1. This name should match the name shown on the charter or other legal document creating the entity. You may enter any business, trade, or DBA name on line 2.

e. **Disregarded entity.** For U.S. federal tax purposes, an entity that is disregarded as an entity separate from its owner is treated as a "disregarded entity." See Regulations section 301.7701-2(c)(2)(iii). Enter the owner's name on line 1. The name of the entity entered on line 1 should never be a disregarded entity. The name on line 1 should be the name shown on the income tax return on which the income should be reported. For example, if a foreign LLC that is treated as a disregarded entity for U.S. federal tax purposes has a single owner that is a U.S. person, the U.S. owner's name is required to be provided on line 1. If the direct owner of the entity is also a disregarded entity, enter the first owner that is not disregarded for federal tax purposes. Enter the disregarded entity's name on line 2, "Business name/disregarded entity name." If the owner of the disregarded entity is a foreign person, the owner must complete an appropriate Form W-8 instead of a Form W-9. This is the case even if the foreign person has a U.S. TIN.

Line 2

If you have a business name, trade name, DBA name, or disregarded entity name, you may enter it on line 2.

Line 3

Check the appropriate box on line 3 for the U.S. federal tax classification of the person whose name is entered on line 1. Check only one box on line 3.

IF the entity/person on line 1 is a(n) . . .	THEN check the box for . . .
• Corporation	Corporation
• Individual • Sole proprietorship, or • Single-member limited liability company (LLC) owned by an individual and disregarded for U.S. federal tax purposes.	Individual/sole proprietor or single-member LLC
• LLC treated as a partnership for U.S. federal tax purposes, • LLC that has filed Form 8832 or 2553 to be taxed as a corporation, or • LLC that is disregarded as an entity separate from its owner but the owner is another LLC that is not disregarded for U.S. federal tax purposes.	Limited liability company and enter the appropriate tax classification. (P= Partnership; C= C corporation; or S= S corporation)
• Partnership	Partnership
• Trust/estate	Trust/estate

Line 4, Exemptions

If you are exempt from backup withholding and/or FATCA reporting, enter in the appropriate space on line 4 any code(s) that may apply to you.

Exempt payee code.

- Generally, individuals (including sole proprietors) are not exempt from backup withholding.
- Except as provided below, corporations are exempt from backup withholding for certain payments, including interest and dividends.
- Corporations are not exempt from backup withholding for payments made in settlement of payment card or third party network transactions.
- Corporations are not exempt from backup withholding with respect to attorneys' fees or gross proceeds paid to attorneys, and corporations that provide medical or health care services are not exempt with respect to payments reportable on Form 1099-MISC.

The following codes identify payees that are exempt from backup withholding. Enter the appropriate code in the space in line 4.

1—An organization exempt from tax under section 501(a), any IRA, or a custodial account under section 403(b)(7) if the account satisfies the requirements of section 401(f)(2)

2—The United States or any of its agencies or instrumentalities

3—A state, the District of Columbia, a U.S. commonwealth or possession, or any of their political subdivisions or instrumentalities

4—A foreign government or any of its political subdivisions, agencies, or instrumentalities

5—A corporation

6—A dealer in securities or commodities required to register in the United States, the District of Columbia, or a U.S. commonwealth or possession

7—A futures commission merchant registered with the Commodity Futures Trading Commission

8—A real estate investment trust

9—An entity registered at all times during the tax year under the Investment Company Act of 1940

10—A common trust fund operated by a bank under section 584(a)

11—A financial institution

12—A middleman known in the investment community as a nominee or custodian

13—A trust exempt from tax under section 664 or described in section 4947

The following chart shows types of payments that may be exempt from backup withholding. The chart applies to the exempt payees listed above, 1 through 13.

IF the payment is for . . .	THEN the payment is exempt for . . .
Interest and dividend payments	All exempt payees except for 7
Broker transactions	Exempt payees 1 through 4 and 6 through 11 and all C corporations. S corporations must not enter an exempt payee code because they are exempt only for sales of noncovered securities acquired prior to 2012.
Barter exchange transactions and patronage dividends	Exempt payees 1 through 4
Payments over $600 required to be reported and direct sales over $5,000[1]	Generally, exempt payees 1 through 5[2]
Payments made in settlement of payment card or third party network transactions	Exempt payees 1 through 4

[1] See Form 1099-MISC, Miscellaneous Income, and its instructions.

[2] However, the following payments made to a corporation and reportable on Form 1099-MISC are not exempt from backup withholding: medical and health care payments, attorneys' fees, gross proceeds paid to an attorney reportable under section 6045(f), and payments for services paid by a federal executive agency.

Exemption from FATCA reporting code. The following codes identify payees that are exempt from reporting under FATCA. These codes apply to persons submitting this form for accounts maintained outside of the United States by certain foreign financial institutions. Therefore, if you are only submitting this form for an account you hold in the United States, you may leave this field blank. Consult with the person requesting this form if you are uncertain if the financial institution is subject to these requirements. A requester may indicate that a code is not required by providing you with a Form W-9 with "Not Applicable" (or any similar indication) written or printed on the line for a FATCA exemption code.

A—An organization exempt from tax under section 501(a) or any individual retirement plan as defined in section 7701(a)(37)

B—The United States or any of its agencies or instrumentalities

C—A state, the District of Columbia, a U.S. commonwealth or possession, or any of their political subdivisions or instrumentalities

D—A corporation the stock of which is regularly traded on one or more established securities markets, as described in Regulations section 1.1472-1(c)(1)(i)

E—A corporation that is a member of the same expanded affiliated group as a corporation described in Regulations section 1.1472-1(c)(1)(i)

F—A dealer in securities, commodities, or derivative financial instruments (including notional principal contracts, futures, forwards, and options) that is registered as such under the laws of the United States or any state

G—A real estate investment trust

H—A regulated investment company as defined in section 851 or an entity registered at all times during the tax year under the Investment Company Act of 1940

I—A common trust fund as defined in section 584(a)

J—A bank as defined in section 581

K—A broker

L—A trust exempt from tax under section 664 or described in section 4947(a)(1)

M—A tax exempt trust under a section 403(b) plan or section 457(g) plan

Note: You may wish to consult with the financial institution requesting this form to determine whether the FATCA code and/or exempt payee code should be completed.

Line 5

Enter your address (number, street, and apartment or suite number). This is where the requester of this Form W-9 will mail your information returns. If this address differs from the one the requester already has on file, write NEW at the top. If a new address is provided, there is still a chance the old address will be used until the payor changes your address in their records.

Line 6

Enter your city, state, and ZIP code.

Part I. Taxpayer Identification Number (TIN)

Enter your TIN in the appropriate box. If you are a resident alien and you do not have and are not eligible to get an SSN, your TIN is your IRS individual taxpayer identification number (ITIN). Enter it in the social security number box. If you do not have an ITIN, see *How to get a TIN* below.

If you are a sole proprietor and you have an EIN, you may enter either your SSN or EIN.

If you are a single-member LLC that is disregarded as an entity separate from its owner, enter the owner's SSN (or EIN, if the owner has one). Do not enter the disregarded entity's EIN. If the LLC is classified as a corporation or partnership, enter the entity's EIN.

Note: See *What Name and Number To Give the Requester,* later, for further clarification of name and TIN combinations.

How to get a TIN. If you do not have a TIN, apply for one immediately. To apply for an SSN, get Form SS-5, Application for a Social Security Card, from your local SSA office or get this form online at *www.SSA.gov.* You may also get this form by calling 1-800-772-1213. Use Form W-7, Application for IRS Individual Taxpayer Identification Number, to apply for an ITIN, or Form SS-4, Application for Employer Identification Number, to apply for an EIN. You can apply for an EIN online by accessing the IRS website at *www.irs.gov/Businesses* and clicking on Employer Identification Number (EIN) under Starting a Business. Go to *www.irs.gov/Forms* to view, download, or print Form W-7 and/or Form SS-4. Or, you can go to *www.irs.gov/OrderForms* to place an order and have Form W-7 and/or SS-4 mailed to you within 10 business days.

If you are asked to complete Form W-9 but do not have a TIN, apply for a TIN and write "Applied For" in the space for the TIN, sign and date the form, and give it to the requester. For interest and dividend payments, and certain payments made with respect to readily tradable instruments, generally you will have 60 days to get a TIN and give it to the requester before you are subject to backup withholding on payments. The 60-day rule does not apply to other types of payments. You will be subject to backup withholding on all such payments until you provide your TIN to the requester.

Note: Entering "Applied For" means that you have already applied for a TIN or that you intend to apply for one soon.

Caution: A disregarded U.S. entity that has a foreign owner must use the appropriate Form W-8.

Part II. Certification

To establish to the withholding agent that you are a U.S. person, or resident alien, sign Form W-9. You may be requested to sign by the withholding agent even if item 1, 4, or 5 below indicates otherwise.

For a joint account, only the person whose TIN is shown in Part I should sign (when required). In the case of a disregarded entity, the person identified on line 1 must sign. Exempt payees, see *Exempt payee code,* earlier.

Signature requirements. Complete the certification as indicated in items 1 through 5 below.

1. Interest, dividend, and barter exchange accounts opened before 1984 and broker accounts considered active during 1983. You must give your correct TIN, but you do not have to sign the certification.

2. Interest, dividend, broker, and barter exchange accounts opened after 1983 and broker accounts considered inactive during 1983. You must sign the certification or backup withholding will apply. If you are subject to backup withholding and you are merely providing your correct TIN to the requester, you must cross out item 2 in the certification before signing the form.

3. Real estate transactions. You must sign the certification. You may cross out item 2 of the certification.

4. Other payments. You must give your correct TIN, but you do not have to sign the certification unless you have been notified that you have previously given an incorrect TIN. "Other payments" include payments made in the course of the requester's trade or business for rents, royalties, goods (other than bills for merchandise), medical and health care services (including payments to corporations), payments to a nonemployee for services, payments made in settlement of payment card and third party network transactions, payments to certain fishing boat crew members and fishermen, and gross proceeds paid to attorneys (including payments to corporations).

5. Mortgage interest paid by you, acquisition or abandonment of secured property, cancellation of debt, qualified tuition program payments (under section 529), ABLE accounts (under section 529A), IRA, Coverdell ESA, Archer MSA or HSA contributions or distributions, and pension distributions. You must give your correct TIN, but you do not have to sign the certification.

What Name and Number To Give the Requester

For this type of account:	Give name and SSN of:
1. Individual	The individual
2. Two or more individuals (joint account) other than an account maintained by an FFI	The actual owner of the account or, if combined funds, the first individual on the account[1]
3. Two or more U.S. persons (joint account maintained by an FFI)	Each holder of the account
4. Custodial account of a minor (Uniform Gift to Minors Act)	The minor[2]
5. a. The usual revocable savings trust (grantor is also trustee)	The grantor-trustee[1]
b. So-called trust account that is not a legal or valid trust under state law	The actual owner[1]
6. Sole proprietorship or disregarded entity owned by an individual	The owner[3]
7. Grantor trust filing under Optional Form 1099 Filing Method 1 (see Regulations section 1.671-4(b)(2)(i)(A))	The grantor*
For this type of account:	**Give name and EIN of:**
8. Disregarded entity not owned by an individual	The owner
9. A valid trust, estate, or pension trust	Legal entity[4]
10. Corporation or LLC electing corporate status on Form 8832 or Form 2553	The corporation
11. Association, club, religious, charitable, educational, or other tax-exempt organization	The organization
12. Partnership or multi-member LLC	The partnership
13. A broker or registered nominee	The broker or nominee
14. Account with the Department of Agriculture in the name of a public entity (such as a state or local government, school district, or prison) that receives agricultural program payments	The public entity
15. Grantor trust filing under the Form 1041 Filing Method or the Optional Form 1099 Filing Method 2 (see Regulations section 1.671-4(b)(2)(i)(B))	The trust

[1] List first and circle the name of the person whose number you furnish. If only one person on a joint account has an SSN, that person's number must be furnished.

[2] Circle the minor's name and furnish the minor's SSN.

[3] You must show your individual name and you may also enter your business or DBA name on the "Business name/disregarded entity" name line. You may use either your SSN or EIN (if you have one), but the IRS encourages you to use your SSN.

[4] List first and circle the name of the trust, estate, or pension trust. (Do not furnish the TIN of the personal representative or trustee unless the legal entity itself is not designated in the account title.) Also see *Special rules for partnerships*, earlier.

***Note:** The grantor also must provide a Form W-9 to trustee of trust.

Note: If no name is circled when more than one name is listed, the number will be considered to be that of the first name listed.

Secure Your Tax Records From Identity Theft

Identity theft occurs when someone uses your personal information such as your name, SSN, or other identifying information, without your permission, to commit fraud or other crimes. An identity thief may use your SSN to get a job or may file a tax return using your SSN to receive a refund.

To reduce your risk:

- Protect your SSN,
- Ensure your employer is protecting your SSN, and
- Be careful when choosing a tax preparer.

If your tax records are affected by identity theft and you receive a notice from the IRS, respond right away to the name and phone number printed on the IRS notice or letter.

If your tax records are not currently affected by identity theft but you think you are at risk due to a lost or stolen purse or wallet, questionable credit card activity or credit report, contact the IRS Identity Theft Hotline at 1-800-908-4490 or submit Form 14039.

For more information, see Pub. 5027, Identity Theft Information for Taxpayers.

Victims of identity theft who are experiencing economic harm or a systemic problem, or are seeking help in resolving tax problems that have not been resolved through normal channels, may be eligible for Taxpayer Advocate Service (TAS) assistance. You can reach TAS by calling the TAS toll-free case intake line at 1-877-777-4778 or TTY/TDD 1-800-829-4059.

Protect yourself from suspicious emails or phishing schemes. Phishing is the creation and use of email and websites designed to mimic legitimate business emails and websites. The most common act is sending an email to a user falsely claiming to be an established legitimate enterprise in an attempt to scam the user into surrendering private information that will be used for identity theft.

The IRS does not initiate contacts with taxpayers via emails. Also, the IRS does not request personal detailed information through email or ask taxpayers for the PIN numbers, passwords, or similar secret access information for their credit card, bank, or other financial accounts.

If you receive an unsolicited email claiming to be from the IRS, forward this message to *phishing@irs.gov*. You may also report misuse of the IRS name, logo, or other IRS property to the Treasury Inspector General for Tax Administration (TIGTA) at 1-800-366-4484. You can forward suspicious emails to the Federal Trade Commission at *spam@uce.gov* or report them at *www.ftc.gov/complaint*. You can contact the FTC at *www.ftc.gov/idtheft* or 877-IDTHEFT (877-438-4338). If you have been the victim of identity theft, see *www.IdentityTheft.gov* and Pub. 5027.

Visit *www.irs.gov/IdentityTheft* to learn more about identity theft and how to reduce your risk.

Privacy Act Notice

Section 6109 of the Internal Revenue Code requires you to provide your correct TIN to persons (including federal agencies) who are required to file information returns with the IRS to report interest, dividends, or certain other income paid to you; mortgage interest you paid; the acquisition or abandonment of secured property; the cancellation of debt; or contributions you made to an IRA, Archer MSA, or HSA. The person collecting this form uses the information on the form to file information returns with the IRS, reporting the above information. Routine uses of this information include giving it to the Department of Justice for civil and criminal litigation and to cities, states, the District of Columbia, and U.S. commonwealths and possessions for use in administering their laws. The information also may be disclosed to other countries under a treaty, to federal and state agencies to enforce civil and criminal laws, or to federal law enforcement and intelligence agencies to combat terrorism. You must provide your TIN whether or not you are required to file a tax return. Under section 3406, payers must generally withhold a percentage of taxable interest, dividend, and certain other payments to a payee who does not give a TIN to the payer. Certain penalties may also apply for providing false or fraudulent information.

Insurance Requirements for Construction Contracts

Contractor shall procure and maintain for the duration of the contract, *and for 2 years thereafter*, insurance against claims for injuries to persons or damages to property which may arise from or in connection with the performance of the work hereunder by the contractor, his agents, representatives, employees, or subcontractors.

MINIMUM SCOPE AND LIMIT OF INSURANCE

Coverage shall be at least as broad as:

1. **Commercial General Liability** (CGL): Insurance Services Office (ISO) Form CG 00 01 covering CGL on an "occurrence" basis, including products and completed operations, property damage, bodily injury and personal & advertising injury with limits no less than **$1,000,000** per occurrence. If a general aggregate limit applies, either the general aggregate limit shall apply separately to this project/location (ISO CG 25 03 or 25 04) or the general aggregate limit shall be twice the required occurrence limit.
2. **Automobile Liability**: Insurance Services Office Form CA 0001 covering Code 1 (any auto), with limits no less than **$1,000,000** per accident for bodily injury and property damage.
3. **Workers' Compensation**: Insurance as required by the State of Texas with Statutory Limits including United States Longshoreman & Harborworkers coverage, as may be required. Employers' Liability insurance with a limit of no less than **$1,000,000** per accident for bodily injury or disease.
4. **Umbrella/Excess Liabilities:** The Contractor shall provide Umbrella/Excess Liability insurance limits of at least $50,000,000 limit.
5. **Builder's Risk**: (Course of Construction) insurance utilizing an "All Risk" (Special Perils) coverage form, with limits equal to the completed value of the project and no coinsurance penalty provisions.
6. **Surety Bonds**: as described below.
7. **Professional Liability**: (If Design/Build), with limits no less than **$2,000,000** per occurrence or claim, and **$2,000,000** policy aggregate.
8. **Contractors' Pollution Legal Liability**: and/or Asbestos Legal Liability and/or Errors and Omissions (if project involves environmental hazards) with limits no less than **$1,000,000** per occurrence or claim, and **$2,000,000** policy aggregate.

If the contractor maintains broader coverage and/or higher limits than the minimums shown above, the Entity requires and shall be entitled to the broader coverage and/or the higher limits maintained by the contractor. Any available insurance proceeds in excess of the specified minimum limits of insurance and coverage shall be available to the Entity.

Self-Insured Retentions

Self-insured retentions must be declared to and approved by the Entity. At the option of the Entity, either: the Contractor shall cause the insurer to reduce or eliminate such self-insured retentions as respects the Entity, its officers, officials, employees, and volunteers; or the Contractor shall provide a financial guarantee satisfactory to the Entity guaranteeing payment of losses and related investigations, claim administration, and defense expenses. The policy language shall provide, or be endorsed to provide, that the self-insured retention may be satisfied by either the named insured or Entity.

Other Insurance Provisions

The insurance policies are to contain, or be endorsed to contain, the following provisions:

1. **The Entity, its officers, officials, employees, and volunteers are to be covered as additional insureds** on the CGL policy with respect to liability arising out of work or operations performed by or on behalf of the Contractor including materials, parts, or equipment furnished in connection with such work or operations and automobiles owned, leased, hired, or borrowed by or on behalf of the Contractor. General Liability coverage can be provided in the form of an endorsement to the Contractor's insurance (at least as broad as ISO Form CG 20 10, CG 11 85 or **both** CG 20 10, CG 20 26, CG 20 33, or CG 20 38; **and** CG 20 37 forms if later revisions used).
2. For any claims related to this project, the **Contractor's insurance coverage shall be primary** insurance coverage at least as broad as ISO CG 20 01 04 12 as respects the Entity, its officers, officials, employees, and volunteers. Any insurance or self-insurance maintained by the Entity, its officers, officials, employees, or volunteers shall be excess of the Contractor's insurance and shall not contribute with it.
3. Each insurance policy required by this clause shall provide that coverage shall not be canceled, except with notice to the Entity.

Builder's Risk (Course of Construction) Insurance

Contractor may submit evidence of Builder's Risk insurance in the form of Course of Construction coverage. Such coverage shall **name the Entity as a loss payee** as their interest may appear.

If the project does not involve new or major reconstruction, at the option of the Entity, and Installation Floater may be acceptable. For such projects, a Property Installation Floater shall be obtained that provides for the improvement, remodel, modification, alteration, conversion or adjustment to existing buildings, structures, processes, machinery and equipment. The Property Installation Floater shall provide property damage coverage for any building, structure, machinery or equipment damaged, impaired, broken, or destroyed during the performance of the Work, including during transit, installation, and testing at the Entity's site.

1. **Owner's & Contractors Protective Liability:** Primary contractors shall purchase and maintain at its own expense, Owner's & Contractors Protective Liability coverage naming

the Port, it's officers, agents, and employees as insured in the same amount and coverage as provided for in the contractors Commercial General Liability Policy.

2. **Marine Operations:** If any operation involves the use of any form of watercraft, additional coverage may be required of Contractors as follows:
    - **a.** In the event the User is required to provide coverage pursuant to this section, such insurance on waterborne vessels shall comply with the following requirements:
        - **i.** If the User uses a chartered waterborne vessel in the operation hereunder, the User shall provide Certificates of Insurance evidencing that the User has procured Charter's Legal Liability Insurance, including full Maritime Employers Liability and Collision and Tower's Liability, covering bodily injury and property damage with a combined single limit of at least $1,000,000 or the value of the vessel, whichever is greater.
        - **ii.** If the User uses an owned waterborne vessel in the operations hereunder, the User shall provide Certificates of Insurance evidencing that the User has procured Hull and Machinery Insurance, including full Collision and Tower's Liability and protection and Indemnity Insurance (including crew) covering bodily injury and property damage, each with a combined single limit of at least $1,000,000 or the value of the vessel, whichever is greater.
        - **iii.** The Port of Port Arthur will be named additional insured and right of subrogation will be waived in favor of the Port of Port Arthur by endorsement acceptable to the Port of Port Arthur risk manager.

If any coverage required is written on a claims-made coverage form:

1. The retroactive date must be shown, and this date must be before the execution date of the contract or the beginning of contract work,
2. Insurance must be maintained and evidence of insurance must be provided for at least five (5) years after completion of contract work.
3. If coverage is cancelled or non-renewed, and not replaced with another claims-made policy form with a retroactive date prior to the contract effective, or start of work date, the Contractor must purchase extended reporting period coverage for a minimum of five (5) years after completion of contractor work.
4. A copy of the claims reporting requirements must be submitted to the Entity for review.
5. If the services involve lead-based paint or asbestos identification/remediation, the Contractors Pollution Liability policy shall not contain lead-based paint or asbestos exclusion. If the services involve mold identification/remediation, the Contractors Pollution Liability policy shall not contain a mold exclusion, and the definition of Pollution shall include microbial matter, including mold.

Acceptability of Insurers:

Insurance is to be placed with insurers authorized to conduct business in the state with a current A.M. Best rating of no less than A:VII, unless otherwise acceptable to the Entity.

Waiver of Subrogation:

Contractor hereby agrees to waive rights of subrogation which any insurer of Contractor may acquire from Contractor by virtue of the payment of any loss. Contractor agrees to obtain any endorsement that may be necessary to affect this waiver of subrogation. **The Workers' Compensation policy shall be endorsed with a waiver of subrogation** in favor of the Entity for all work performed by the Contractor, its employees, agents, and subcontractors.

Verification of Coverage

Contractor shall furnish the Entity with original Certificates of Insurance including all required amendatory endorsements (or copies of the applicable policy language effecting coverage required by this clause) and a copy of the Declarations and Endorsement Page of the CGL policy listing all policy endorsements to Entity before work begins. However, failure to obtain the required documents prior to the work beginning shall not waive the Contractor's obligation to provide them. The Entity reserves the right to require complete, certified copies of all required insurance policies, including endorsements, required by the specifications, at any time.

Subcontractors

Contractor shall require and verify that all subcontractors maintain insurance meeting all requirements stated herein, and Contractor shall ensure that Entity is an additional insured on insurance required from subcontractors, For CGL coverage, subcontractors shall provide coverage with a form at least as broad as CG 20 38 04 13.

Surety Bonds

Contractor shall provide the following Surety Bonds when required by The Port or Port Arthur:

1. Bid Bond
2. Performance Bond
3. Payment Bond
4. Maintenance Bond

The Payment Bond and the Performance Bond shall be in a sum equal to the contract price. If the Performance Bond provides for a one-year warranty a separate Maintenance Bond is not necessary. If the warranty period specified in the contract is for longer than one year a Maintenance Bond equal to 10% of the contract price is required. Bonds shall be duly executed by a responsible corporate surety, authorized to issue such bonds in the State of Texas and secured through an authorized agent with an office in Texas.

Special Risks or Circumstances

Entity reserves the right to modify these requirements, including limits, based on the nature of the risk, prior, experience, insurer, coverage, or other circumstances.

PORT OF PORT ARTHUR NAVIGATION DISTRICT
BERTH 6 EXPANSION

PORT COMMISSIONERS

JOHN COMEAUX, PRESIDENT
RANDY T. MARTIN, VICE PRESIDENT
LINDA TURNER SPEARS, SECRETARY/TREASURER
RAYMOND C. JOHNSON, COMMISSIONER
MARY WYCOFF, COMMISSIONER

OFFICERS

LARRY A. KELLEY, JR., EXECUTIVE PORT DIRECTOR/CEO
ED LONG, DIRECTOR OF ENGINEERING

PORT OF PORT ARTHUR

PORT PROJECT NUMBER: 8.334
JUNE 2021
1 REVISION 1, 8/25/2021

OWNER	OPERATOR
PORT OF PORT ARTHUR P.O. BOX 1428 PORT ARTHUR, TX 77641	PORT OF PORT ARTHUR 221 HOUSTON AVE PORT ARTHUR, TX 77641

APPROVED FOR CONSTRUCTION

PORT OF PORT ARTHUR

EXECUTIVE PORT DIRECTOR — DATE
PORT PROJECT MANAGER — DATE

COLLINS ENGINEERS, INC.

SENIOR VICE PRESIDENT — DATE
ENGINEER-OF-RECORD — DATE

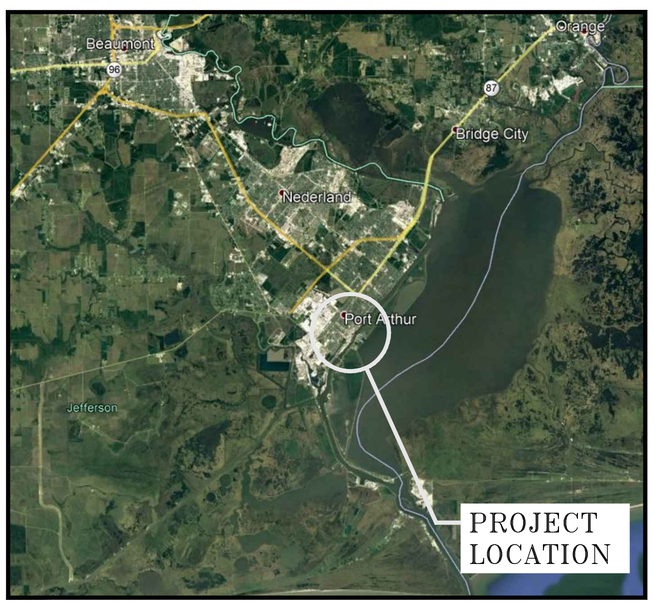

VICINITY MAP
NOT TO SCALE

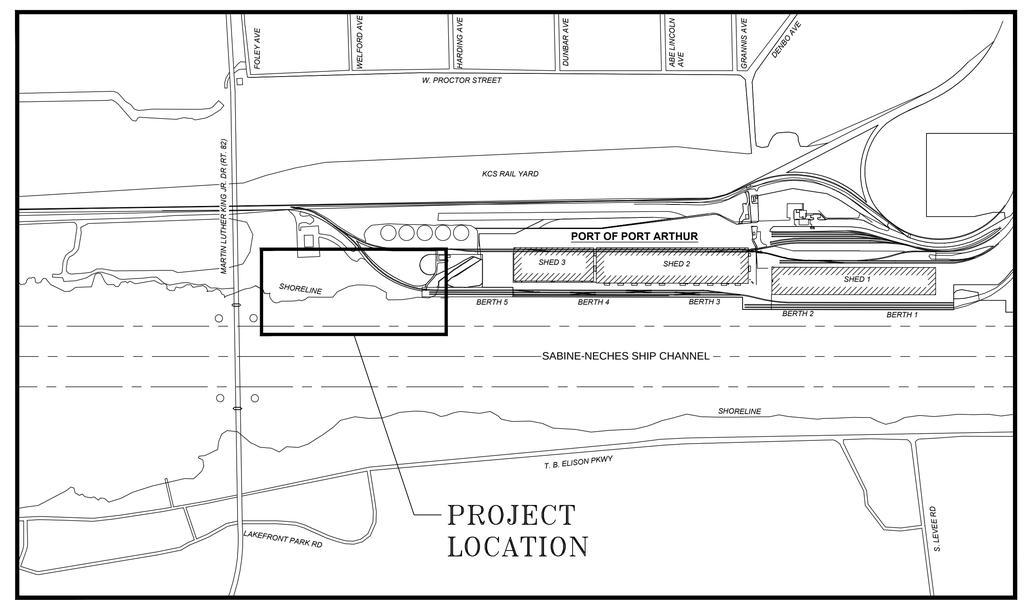

LOCATION MAP
SCALE: 1" = 300'

Berth 6 Expansion

Port of Port Arthur
P.O. Box 1428
Port Arthur, Texas 77641

COLLINS ENGINEERS INC
501 PROCTER ST., SUITE 324
PORT ARTHUR, TX 77640
409-895-2550
WWW.COLLINSENGR.COM
TX-FIRM F-9791

8/25/21
STATE OF TEXAS
MICHAEL J. SCHNEIDER
112407
LICENSED PROFESSIONAL ENGINEER
SEAL
COLLINS ENGINEERS, INC.
TEXAS REGISTERED ENGINEERING FIRM F-9791

REVISIONS

NO.	DESCRIPTION	DATE
1	ADDENDUM 2	8/25/21

FOR BIDDING ONLY
NOT FOR CONSTRUCTION

Designed by:	ZDJ
Drawn by:	BRB
Checked by:	WMM
Reviewed by:	MJS
Revisions by:	

PROJECT NO. 8.334
DATE: 06/23/2021

PORT OF PORT ARTHUR
BERTH 6 EXPANSION
PORT ARTHUR TX

GENERAL
TITLE SHEET

DISCIPLINE/SHT NO
G-001
SHEET 1 OF 110

DRAWFORM REVISION: 31 JANUARY 2017

FILE NAME: \\Mosunc-nh\ph\Regular Projects\15-10615.00 POPA Berth 6\06 - Engineering\02 - Drawings\Working Design Drawings\G-001.dwg LAYOUT NAME: G-001 TITLE SHEET PLOTTED: Wednesday, August 25, 2021 - 5:29pm USER: zjenkins

INDEX OF DRAWINGS				REV 1
	SHEET	DISCIPLINE	SHEET TITLE	
1	G-001	GENERAL	TITLE SHEET	X
2	G-002	GENERAL	DRAWING INDEX	X
3	G-003	GENERAL	DESIGN CRITERIA	
4	G-004	GENERAL	GENERAL NOTES	X
5	G-005	GENERAL	EXISTING CONDITIONS PLAN - 1	
6	G-006	GENERAL	EXISTING CONDITIONS PLAN - 2	
7	G-007	GENERAL	WORK PLAN	X
8	G-008	GENERAL	CONTRACTOR ACCESS AND LAYDOWN PLAN	
9	G-009	GENERAL	CONSTRUCTION PHASING PLAN	X
10	G-010	GENERAL	EROSION CONTROL PLAN - PHASE 1	
11	G-011	GENERAL	EROSION CONTROL PLAN - PHASE 2	
12	G-012	GENERAL	EROSION CONTROL DETAILS	
13	B-001	GEOTECHNICAL	BORING LOCATION PLAN	
14	B-002	GEOTECHNICAL	BORING LOGS - 1	
15	B-003	GEOTECHNICAL	BORING LOGS - 2	
16	B-004	GEOTECHNICAL	BORING LOGS - 3	
17	B-005	GEOTECHNICAL	BORING LOGS - 4	
18	B-006	GEOTECHNICAL	BORING LOGS - 5	
19	B-007	GEOTECHNICAL	BORING LOGS - 6	
20	B-008	GEOTECHNICAL	BORING LOGS - 7	
21	B-009	GEOTECHNICAL	BORING LOGS - 8	
22	CD-001	CIVIL DEMOLITION	CIVIL DEMOLITION PLAN	
23	CD-002	CIVIL DEMOLITION	CIVIL DEMOLITION DETAILS	
24	D-001	DREDGING	DREDGING PLAN - 1	
25	D-002	DREDGING	DREDGING PLAN - 1	
26	D-003	DREDGING	DREDGING CROSS SECTIONS - 1	
27	D-004	DREDGING	DREDGING CROSS SECTIONS - 2	
28	D-005	DREDGING	DREDGING CROSS SECTIONS - 3	
29	C-001	CIVIL	SITE AND SURFACING PLAN - 1	
30	C-002	CIVIL	SITE AND SURFACING PLAN - 2	
31	C-003	CIVIL	SITE GRADING PLAN - 1	
32	C-004	CIVIL	SITE GRADING PLAN - 2	
33	C-005	CIVIL	SHORELINE STABILIZATION PLAN	
34	C-006	CIVIL	SHORELINE STABILIZATION CROSS SECTIONS	
35	C-007	CIVIL	SHORELINE STABILIZATION DETAILS	X
36	C-008	CIVIL	SITE GRADING TYPICAL SECTIONS	X
37	C-009	CIVIL	CONSTRUCTION DETAILS - 1	
38	C-010	CIVIL	CONSTRUCTION DETAILS - 2	
39	C-011	CIVIL	DRAINAGE AREA SYSTEM MAP	
40	C-012	CIVIL	DRAINAGE PLAN - 1	X
41	C-013	CIVIL	DRAINAGE PLAN - 2	X
42	C-014	CIVIL	STORM SEWER DETAILS	
43	C-015	CIVIL	WHARF DRAINAGE AREA MAP	
44	C-016	CIVIL	WHARF DRAINAGE PLAN AND PROFILE	
45	C-017	CIVIL	WHARF DRAINAGE DETAILS	
46	S-001	STRUCTURAL	STRUCTURAL NOTES	X
47	S-002	STRUCTURAL	BULKHEAD AND BACKLAND SECTIONS	X
48	S-003	STRUCTURAL	BULKHEAD PLAN	X
49	S-004	STRUCTURAL	BULKHEAD TYPICAL SECTION	X
50	S-005	STRUCTURAL	BULKHEAD CAP DETAILS	X
51	S-006	STRUCTURAL	BULKHEAD WALL TERMINATION DETAILS	X
52	S-007	STRUCTURAL	BULKHEAD AND ANCHOR WALL DETAILS	X
53	S-008	STRUCTURAL	BULKHEAD AND ANCHOR WALL TIE BACK DETAILS	X
54	S-009	STRUCTURAL	BULKHEAD PENETRATION DETAILS - 1	X
55	S-010	STRUCTURAL	BULKHEAD PENETRATION DETAILS - 2	X
56	S-011	STRUCTURAL	WHARF PILE PLAN	X

INDEX OF DRAWINGS				REV 1
	SHEET	DISCIPLINE	SHEET TITLE	
57	S-012	STRUCTURAL	PILE SCHEDULE AND DETAILS	X
58	S-013	STRUCTURAL	PILE DETAILS - 1	
59	S-014	STRUCTURAL	PILE DETAILS - 2	
60	S-015	STRUCTURAL	WHARF FRAMING PLAN	
61	S-016	STRUCTURAL	WHARF DECK PLAN	
62	S-017	STRUCTURAL	WHARF TYPICAL SECTION	X
63	S-018	STRUCTURAL	WHARF SECTION AT BOLLARD	X
64	S-019	STRUCTURAL	WHARF SECTION AT FENDER PANEL	X
65	S-020	STRUCTURAL	WHARF PILE CAP DETAILS - 1	
66	S-021	STRUCTURAL	WHARF PILE CAP DETAILS - 1	
67	S-022	STRUCTURAL	WHARF CRANE RAIL BEAM DETAILS - 1	
68	S-023	STRUCTURAL	WHARF CRANE RAIL BEAM DETAILS - 2	
69	S-024	STRUCTURAL	WHARF CRANE RAIL BEAM DETAILS - 3	
70	S-025	STRUCTURAL	WHARF DECK PLANK DETAILS - 1	
71	S-026	STRUCTURAL	WHARF DECK PLANK DETAILS - 2	
72	S-027	STRUCTURAL	WHARF DECK PLANK DETAILS - 3	
73	S-028	STRUCTURAL	WHARF DECK PLANK DETAILS - 4	
74	S-029	STRUCTURAL	WHARF DECK PLANK DETAILS - 5	
75	S-030	STRUCTURAL	BERTH 5 INTERFACE DETAILS - 1	X
76	S-031	STRUCTURAL	BERTH 5 INTERFACE DETAILS - 2	
77	S-032	STRUCTURAL	WHARD FENDER PANEL BLOCK DETAILS - 1	
78	S-033	STRUCTURAL	WHARD FENDER PANEL BLOCK DETAILS - 2	X
79	S-034	STRUCTURAL	BOLLARD DETAIL - 1	
80	S-035	STRUCTURAL	BOLLARD DETAIL - 2	
81	S-036	STRUCTURAL	DECK TOPPING AND EXPANSION JOINT DETAILS - 1	
82	S-037	STRUCTURAL	DECK TOPPING AND EXPANSION JOINT DETAILS - 2	
83	S-038	STRUCTURAL	POTABLE WATER VAULT PLAN, SECTION, AND DETAILS	X
84	S-039	STRUCTURAL	ELECTRICAL VAULT PLAN, SECTION, AND DETAILS	
85	S-040	STRUCTURAL	HURRICANE TIE-DOWN/STOWAGE PIN DETAILS - 1	
86	S-041	STRUCTURAL	HURRICANE TIE-DOWN/STOWAGE PIN DETAILS - 2	
87	S-042	STRUCTURAL	BULLRAIL DETAILS	
88	S-043	STRUCTURAL	FENDER SYSTEM DETAIL	X
89	S-044	STRUCTURAL	BACKLAND SOIL IMPROVEMENTS	X
90	S-045	STRUCTURAL	BERTH 5 TO BERTH 6 BACKLAND TRANSITION	
91	S-046	STRUCTURAL	BACKLAND DETAILS	X
92	S-047	STRUCTURAL	LIGHT POLE FOUNDATION DETAILS	
93	R-001	RAIL	TRACK PLAN AND PROFILE	
94	R-002	RAIL	TYPICAL RAIL SECTION AND BUMPING POST DETAILS	
95	R-003	RAIL	RAIL CROSSOVER DETAILS	
96	R-004	RAIL	RAIL EXPANSION JOINT DETAILS	
97	R-005	RAIL	RAIL ATTACHMENT DETAILS	
98	P-001	MECHANICAL	POTABLE WATER NOTES, SYMBOLS AND ABBREVIATIONS	
99	P-002	MECHANICAL	POTABLE WATER SITE PLAN	
100	P-003	MECHANICAL	POTABLE WATER PIPING INSTALLATION-WHARF SECTION	
101	P-004	MECHANICAL	POTABLE WATER DETAILS	
102	E-001	MECHANICAL	ELECTRICAL NOTES, SYMBOLS, & ABBREVIATIONS	
103	E-002	ELECTRICAL	ELECTRICAL SITE PLAN	
104	E-003	ELECTRICAL	ELECTRICAL DETAILS	X
105	E-004	ELECTRICAL	POLE LIGHT DETAILS, SCHEDULE & ELEC. ROOM PLAN	X
106	E-005	ELECTRICAL	ELECTRICAL MANHOLE DETAILS	
107	E-006	ELECTRICAL	HEAT TRACE DETAILS	
108	CP-001	ELECTRICAL	BULKHEAD PLAN VIEW - ANODE LAYOUT	X
109	CP-002	ELECTRICAL	TYPICAL SECTION OF WATER SIDE AND SOIL SIDE ANODES	X
110	CP-003	ELECTRICAL	TYPICAL CATHODIC PROTECTION DETAILS	X

Berth 6 Expansion

Port of Port Arthur
P.O. Box 1428
Port Arthur, Texas 77641

COLLINS ENGINEERS INC.
501 PROCTER ST., SUITE 324
PORT ARTHUR, TX 77640
409-895-2550
WWW.COLLINSENGR.COM
TX-FIRM F-9791

8/25/21

STATE OF TEXAS
MICHAEL J. SCHNEIDER
112407
LICENSED
PROFESSIONAL ENGINEER

COLLINS ENGINEERS, INC. SEAL
TEXAS REGISTERED ENGINEERING FIRM F-9791

REVISIONS

NO.	DESCRIPTION	DATE
1	ADDENDUM 2	8/25/21

FOR BIDDING ONLY
NOT FOR CONSTRUCTION

Designed by:	ZDJ
Drawn by:	BRB
Checked by:	WWM
Reviewed by:	MJS
Revisions by:	

PROJECT NO. 8.334
DATE: 06/23/2021

PORT OF PORT ARTHUR

BERTH 6 EXPANSION

PORT ARTHUR TX

GENERAL

DRAWING INDEX

DISCIPLINE/SHT NO
G-002

SHEET 2 OF 110

DRAWFORM REVISION: 31 JANUARY 2017

\\Nasuni-nh\nh\Regular Projects\15-10615.00 PORA Berth 6\06 - Engineering\02 - Drawings\Working Design Drawings\G-002.dwg, G-002 DRAWING INDEX, 8/27/2021 9:44:37 AM, File Location, File Location

GENERAL:

1. THE CONTRACTOR IS ADVISED THAT THE DRAWINGS AND SPECIFICATIONS FORM A PART OF THE CONTRACT DOCUMENTS. REFER TO THE TECHNICAL SPECIFICATIONS FOR ADDITIONAL REQUIREMENTS. ALL MATERIAL AND WORK PERFORMED SHALL BE IN ACCORDANCE WITH THE CONTRACT DOCUMENTS. THE CONTRACTOR SHALL KEEP A COPY OF THE DRAWINGS AND SPECIFICATIONS ONSITE AT ALL TIMES DURING THE PROJECT.
2. EXISTING CONDITIONS SHOWN ARE INTENDED TO PROVIDE A GENERAL OVERVIEW OF STRUCTURES AND MAY NOT INCLUDE ALL APPURTENANCES AND CONDITIONS.
3. DIMENSIONS AND DETAILS OF THE EXISTING CONDITIONS ARE FROM AVAILABLE RECORD AND AS-BUILT INFORMATION AND LIMITED FIELD OBSERVATIONS. ALL DIMENSIONS, ELEVATIONS, AND DETAILS OF THE EXISTING CONDITIONS RELATED TO THE WORK SHALL BE FIELD VERIFIED BY THE CONTRACTOR PRIOR TO COMMENCING CONSTRUCTION. THIS INCLUDES COMPLETING A TOPOGRAPHIC AND HYDROGRAPHIC SURVEY OF THE WORK AREA. ANY DISCREPANCIES SHALL BE BROUGHT TO THE ATTENTION OF THE OWNER'S REPRESENTATIVE BEFORE ORDERING MATERIALS AND STARTING THE WORK.
4. THE SIZE & LOCATION OF ALL EXISTING UTILITIES IMPACTED BY THE WORK SHALL BE FIELD VERIFIED BY THE CONTRACTOR PRIOR TO START OF CONSTRUCTION. TAKE ALL NECESSARY PRECAUTIONS TO PROTECT EXISTING UTILITIES AND MAINTAIN UNINTERRUPTED SERVICE. ANY DAMAGE INCURRED SHALL BE REPAIRED IMMEDIATELY TO THE SATISFACTION OF THE OWNER'S REPRESENTATIVE AT THE CONTRACTOR'S EXPENSE. NOTIFY THE OWNER'S REPRESENTATIVE A MINIMUM OF 15 DAYS IN ADVANCE OF ANY PLANNED OUTAGES.
5. THE PORT SHALL REMAIN OPEN AND OPERATIONAL THROUGHOUT CONSTRUCTION. IT IS THE CONTRACTOR'S RESPONSIBILITY TO COORDINATE THE WORK SCHEDULE SUCH THAT THE WORK DOES NOT INTERFERE WITH PORT OPERATIONS.
6. BERTH 5 WHARF EXPANSION TO BE COMPLETED BY OTHERS, PRIOR TO COMMENCING BERTH 6 WORK. CONTOURS AND GEOMETRY SHOWN FOR BERTH 5 ARE BASED ON PROPOSED DRAWINGS AND MAY NOT REFLECT ACTUAL AS-BUILT CONDITIONS.
7. THE CONTRACTOR SHALL SCHEDULE AND COORDINATE ALL WORK WITH THE OWNER'S REPRESENTATIVE AND SHALL MAINTAIN THE WORK SITE TO THE SATISFACTION OF THE OWNER'S REPRESENTATIVE AND THE PORT. CONTRACTOR SHALL COORDINATE DAILY WITH THE OWNER'S REPRESENTATIVE TO CONFIRM SCHEDULED VESSEL(S) AND PORT OPERATIONS THAT MAY IMPACT THE WORK.
8. STANDARD CONSTRUCTION WORK HOURS ON THE SITE SHALL BE AS OUTLINED IN THE PROJECT SPECIFICATIONS TO MINIMIZE NOISE AND LIGHT DISTURBANCE TO NEARBY RESIDENTIAL PROPERTIES. SPECIAL WORK OUTSIDE OF THESE HOURS SHALL BE APPROVED AND SCHEDULED WITH THE OWNER'S REPRESENTATIVE.
9. THE CONTRACTOR IS SOLELY RESPONSIBLE FOR THE MEANS, METHODS, TECHNIQUES, SEQUENCES, AND OPERATION OF CONSTRUCTION AND SAFETY PRECAUTIONS AND PROGRAMS INCIDENTAL THERETO.
10. THE CONTRACTOR IS SOLELY RESPONSIBLE FOR THE DESIGN, INSTALLATION, AND REMOVAL OF ALL TEMPORARY BRACING AND CONSTRUCTION SUPPORTS, AS NECESSARY TO COMPLETE THE PROJECT. CONTRACTOR SHALL RETAIN A STRUCTURAL ENGINEER LICENSED IN THE STATE OF TEXAS TO DESIGN ALL TEMPORARY BRACING AND CONSTRUCTION SUPPORTS.
11. THE CONTRACTOR IS RESPONSIBLE FOR ALL DAMAGE DONE TO ADJACENT STRUCTURES, FACILITIES, VESSELS, AND WHARF COMPONENTS NOT WITHIN THE SCOPE OF THIS PROJECT AND ANY INJURIES TO THE PUBLIC, PORT PERSONNEL, AND PORT OPERATORS THAT RESULT FROM PERFORMING THE WORK. REPAIR OR REPLACEMENT OF SUCH DAMAGES SHALL BE COMPLETED BY THE CONTRACTOR AT THE EXPENSE OF THE CONTRACTOR AND TO THE SATISFACTION OF THE OWNER'S REPRESENTATIVE AND PORT.
12. THE CONTRACTOR SHALL FOLLOW ALL APPLICABLE FEDERAL, STATE AND MUNICIPAL REGULATIONS, INCLUDING THE FEDERAL DEPARTMENT OF LABOR, SAFETY, OCCUPATIONAL SAFETY, HEALTH ACT, U.S. ARMY CORPS OF ENGINEERS, STATE/LOCAL WETLANDS CONTROL, AND PERMITS.
13. STORAGE, FUELING AND LUBRICATION OF EQUIPMENT AND VEHICLES SHALL BE CONDUCTED IN A MANNER THAT AFFORDS THE MAXIMUM PROTECTION AGAINST SPILL AND EVAPORATION. FUEL, LUBRICANTS AND USE OIL SHALL BE MANAGED AND STORED IN ACCORDANCE WITH ALL FEDERAL, STATE, REGIONAL, AND LOCAL LAWS AND REGULATIONS. THERE SHALL BE NO STORAGE OF FUEL ON THE PROJECT SITE. FUEL MUST BE BROUGHT TO THE PROJECT SITE AS NEEDED. EQUIPMENT OPERATION, ACTIVITIES, OR PROCESSES PERFORMED BY THE CONTRACTOR SHALL BE IN ACCORDANCE WITH ALL FEDERAL AND STATE AIR EMISSION AND PERFORMANCE LAWS AND STANDARDS.
14. INSPECTION OF COMPLETED WORK WILL BE PERFORMED BY THE OWNER'S REPRESENTATIVE AND THE PORT FOLLOWING NOTIFICATION FROM THE CONTRACTOR THAT A SPECIFIED PORTION OF THE WORK HAS BEEN COMPLETED. THE CONTRACTOR MAY BE CHARGED ANY ADDITIONAL COST OF REINSPECTION OR RETEST WHEN REJECTION MAKES REINSPECTION OR RETEST NECESSARY.

UTILITY NOTES:

1. ALL UTILITY SERVICES ARE SHOWN IN SCHEMATIC FASHION. THEIR LOCATIONS ARE NOT PRECISE OR NECESSARILY ACCURATE. NO WORK WHATSOEVER SHALL BE UNDERTAKEN ON THIS SITE USING THESE DRAWINGS TO LOCATE THE ABOVE SERVICES. CONSULT WITH THE PROPER AUTHORITIES CONCERNED WITH THE SUBJECT SERVICE LOCATIONS FOR INFORMATION REGARDING SUCH. CALL TEXAS811 PRIOR TO ANY EXCAVATION OR GROUND PENETRATING ACTIVITY.
2. THE SIZE & LOCATION OF ALL EXISTING UTILITIES IMPACTED BY THE WORK SHALL BE FIELD VERIFIED BY THE CONTRACTOR PRIOR TO START OF CONSTRUCTION.
3. ALL UTILITIES WITHIN THE LIMITS OF THE WORK NOT IDENTIFIED FOR REMOVALS SHALL BE EITHER PROTECTED AND SUPPORTED DURING CONSTRUCTION, OR DISCONNECTED AND REINSTALLED, AS NECESSARY TO COMPLETE THE WORK. ANY UTILITY COMPONENTS THAT ARE DAMAGED DURING CONSTRUCTION SHALL BE REPAIRED OR REPLACED IN-KIND, AT NO ADDITIONAL COST TO THE PORT. REPLACEMENT AND REPAIRS FOR DAMAGED UTILITIES SHALL BE COMPLETED IMMEDIATELY AND TO THE SATISFACTION OF THE OWNER'S REPRESENTATIVE.
4. NOTIFY THE OWNER'S REPRESENTATIVE A MINIMUM OF 15 DAYS IN ADVANCE OF ANY PLANNED OUTAGES. OUTAGES SHALL BE LIMITED TO THE MAXIMUM EXTENT PRACTICAL TO MINIMIZE INTERRUPTIONS TO PORT OPERATIONS. TEMPORARY UTILITIES SHALL BE PROVIDED FOR ANY OUTAGES LASTING LONGER THAN 12 HOURS. NOTIFY THE OWNER'S REPRESENTATIVE AND THE PORT A MINIMUM OF 5 WORKING DAYS IN ADVANCE OF ANY OUTAGES. ALL OUTAGES, SHALL BE APPROVED BY THE OWNER'S REPRESENTATIVE AND COORDINATED WITH THE PORT.
5. ALL INCIDENTAL ELECTRICAL WORK AS REQUIRED TO COMPLETE THE REPAIRS SHALL BE COMPLETED IN ACCORDANCE WITH THE NFPA 70: NATIONAL ELECTRIC CODE.

CONSTRUCTION LOADING:

1. CONSTRUCTION LOADING FOR RIGID INCLUSION INSTALLATION (AFTER INSTALLATION OF THE COMBI-WALL SYSTEM, BACKFILL TO THE BOTTOM OF THE LOAD TRANSFER PLATFORM, AND PRIOR TO INSTALLATION OF THE COMPLETE TIE-BACK SYSTEM) IS LIMITED TO AN EQUIVALENT EQUIPMENT LOADING OF 500 PSF DISTRIBUTED OVER A 30-FT BY 30-FT AREA, WITH THE EDGE OF THE LOADED AREA PLACED NO CLOSER THAN 10 FEET FROM THE LANDWARD FACE OF THE BULKHEAD. EVALUATION FOR SUITABILITY OF HEAVIER EQUIPMENT LOADS OR OTHER CONCENTRATED LOADS DURING INSTALLATION OF THE RIGID INCLUSIONS SHALL BE THE RESPONSIBILITY OF THE CONTRACTOR AND SUBJECT TO APPROVAL BY THE PORT.
2. CONSTRUCTION LOADING WITHIN 50 FEET OF THE BULKHEAD AFTER INSTALLATION IS LIMITED TO A UNIFORM LIVE LOAD OF 1,000 PSF AND HS-20 TRUCK LOADS. BULKHEAD INSTALLATION CONSISTS OF THE COMPLETE BULKHEAD SYSTEM, INCLUDING BUT NOT LIMITED TO THE COMBI-WALL, TIE-BACKS INCLUDING PRETENSIONING, ANCHOR WALL, GEOGRID MAT LOAD TRANSFER PLATFORM, AND BACKFILL TO FINISH GRADE BELOW THE PAVEMENT AND BASE COURSE. EVALUATION FOR SUITABILITY OF HEAVIER WHEEL LOADS, CRANE LOADS, OR OTHER CONCENTRATED LOADS DURING CONSTRUCTION IN THIS AREA SHALL BE THE RESPONSIBILITY OF THE CONTRACTOR AND SUBJECT TO APPROVAL BY THE PORT.
3. DETERMINATION OF CONSTRUCTION LOADS, INCLUDING BUT NOT LIMITED TO UNIFORM LIVE LOADS, CRANE LOADS, WHEEL LOADS, AND OTHER CONCENTRATED LOADS ON EXISTING STRUCTURES, OR STRUCTURES ERECTED UNDER THIS CONTRACT SHALL BE THE RESPONSIBILITY OF THE CONTRACTOR, AND SUBJECT TO APPROVAL BY THE PORT.

ENVIRONMENTAL CONTROL NOTES:

1. THE CONTRACTOR SHALL PROVIDE AND MAINTAIN ENVIRONMENTAL CONTROLS AS REQUIRED BY FEDERAL, STATE AND MUNICIPAL REGULATIONS AND PERMITS. ENVIRONMENTAL CONTROLS SHALL INCLUDE BUT NOT BE LIMITED TO DUST, TURBIDITY AND PREVENTION OF ANY CONSTRUCTION DEBRIS FROM ENTERING THE WATERWAY.
2. ENVIRONMENTAL CONTROLS SHALL CONFORM TO THE ALL STATE, LOCAL, AND FEDERAL REGULATIONS AND PERMITS; AS WELL AS THE REQUIREMENTS PROVIDED IN THE PROJECT SPECIFICATIONS.
3. THIS PROJECT REQUIRES THE IMPLEMENTATION OF A BEST MANAGEMENT PRACTICES PLAN (BMP) DURING ALL CONSTRUCTION WORK TO PREVENT/MINIMIZE ENVIRONMENTAL IMPACTS DURING THE CONSTRUCTION ACTIVITY.
   a. FRESH CONCRETE AND WATER WITH CEMENTITIOUS PARTICLES SHALL BE PREVENTED FROM ENTERING THE WATER DURING ALL CONCRETE WORK. ALL FORMS SHALL BE WATER TIGHT. CONCRETE AND WATER WITH CEMENTITIOUS PARTICLES SHALL NOT OVERFLOW FORMWORK.
   b. THE CONTRACTOR SHALL ABIDE BY ALL APPLICABLE FEDERAL, STATE, AND LOCAL ENVIRONMENTAL PROTECTION STANDARDS, PERMITS, LAWS, AND REGULATIONS, INCLUDING THE BEST MANAGEMENT PRACTICES PLAN FOR PORT CONSTRUCTION PROJECTS UTILIZING ARMY CORPS OF ENGINEERS NATIONWIDE PERMITS.

SURVEY:

1. CONTRACTOR SHALL COMPLETE A SITE SURVEY OF EXISTING CONDITIONS PRIOR TO CONSTRUCTION IN ORDER TO ESTABLISH EXISTING LINES, FEATURE LOCATIONS AND LIMITS, BASELINES, AND ELEVATIONS WITHIN THE LIMITS OF WORK. IT IS THE CONTRACTOR'S RESPONSIBILITY TO ENSURE ACCURACY OF THE SURVEY FOR CONSTRUCTION AND INSTALLATION OF SITE FEATURES INTENDED TO MATCH THE EXISTING LINES AND LOCATIONS.
2. CONTRACTOR SHALL MAINTAIN ADEQUATE SURVEY CONTROL AT ALL TIMES TO ESTABLISH AND MAINTAIN ALL LINES AND ELEVATIONS.
3. TOPOGRAPHIC SURVEY DATA IS BASED ON PLAN TITLED "TOPOGRAPHIC SURVEY AND HYDRO SURVEY, PORT OF PORT ARTHUR BERTH 6" COMPLETED BY SOUTEX SURVEYORS AND ENGINEERS, DECEMBER 22, 2017, AND "TOPOGRAPHIC SURVEY AND HYDRO SURVEY, PORT OF PORT ARTHUR BERTH 5", COMPLETED BY SOUTEX SURVEYORS AND ENGINEERS, REVISED MARCH 23, 2017. FEATURES SHOWN CAN ONLY BE CONSIDERED INDICATIVE OF CONDITIONS EXISTING AT THAT TIME.
4. BATHYMETRIC DATA SHOWN IS BASED ON SURVEY COMPLETED BY SOUTEX SURVEYING INC ON NOVEMBER 17, 2017 USING ASV-ECHOBOAT, SONARMITE ECHOSOUNDER (HIGH FREQ.-200KHZ, LOW FREQ-30 KHZ) & SIDE SCAN SONAR (STARFISH 990F) EQUIPMENT AND REPRESENTS THE CONDITIONS AT THE TIME OF THE SURVEY. CONDITIONS AT TIME OF THE PROJECT MAY VARY.
5. LOCATION OF FEDERAL CHANNEL BASED ON PLAN TITLED "TOPOGRAPHIC SURVEY AND HYDRO SURVEY, PORT OF PORT ARTHUR BERTH 6", COMPLETED BY SOUTEX SURVEYORS AND ENGINEERS, DECEMBER 22, 2017 WITH REFERENCE TO INFORMATION FROM THE CORPS OF ENGINEERS.
6. HORIZONTAL COORDINATES ARE BASED ON NAD83, STATE PLANE GRID COORDINATES, TEXAS SOUTH CENTRAL ZONE.
7. ELEVATIONS ARE IN FEET BASED ON NAVD88 GEOID DERIVED ORTHOMETRIC HEIGHTS AND ARE REFERENCED TO TCOON TIDAL STATION # 524 "PORT ARTHUR" BENCHMARK "LUB0475C" HAVING A PUBLISHED ELEVATION OF 8.91 FT. ELEVATIONS SHOWN HEREON ARE NAVD88 ORTHOMETRIC HEIGHTS DERIVED USING GEOID 12A.

DEMOLITION AND REMOVAL NOTES:

1. ALL COMPONENTS CALLED OUT AS "TO BE REMOVED" OR "REMOVE", SHALL BE REMOVED AND DISPOSED OF BY THE CONTRACTOR. ITEMS CALLED OUT AS "TO BE REMOVED AND SALVAGED" OR "REMOVE AND SALVAGE", SHALL BE REMOVED, CLEANED OF DIRT AND DEBRIS, AND STORED ON-SITE. ITEMS IDENTIFIED FOR REUSE SHALL BE STORED AND PROTECTED UNTIL REINSTALLATION. COORDINATE STORAGE LOCATIONS WITH THE OWNER'S REPRESENTATIVE.
3. THE CONTRACTOR SHALL HAVE THE SOLE RESPONSIBILITY OF REMOVING ALL EXISTING SHORELINE STRUCTURES AND ABANDONED INLAND STRUCTURES THAT MAY IMPACT THE WORK, TO A DEPTH OF 10 FEET BELOW THE EXISTING GRADE/MUDLINE. THIS INCLUDES BUT IS NOT LIMITED TO PILES, BULKHEADS, SUBMERGED MARINE VESSELS, AND OTHER ITEMS ASSOCIATED WITH EXISTING SHORELINE OR INLAND STRUCTURE.
4. THE LIMITS, EXTENTS, AND MATERIAL OF REMNANT SHORELINE STRUCTURES SHOWN ON SHEET CD-001 ARE INTERPRETED FROM AVAILABLE HISTORICAL INFORMATION AND LIMITED FIELD OBSERVATIONS. THE CONTRACTOR IS RESPONSIBLE FOR IDENTIFYING REMNANT STRUCTURES WITHIN THE LIMITS OF WORK UP TO A DEPTH OF 10 FEET BELOW THE MUDLINE, AND COORDINATING REMOVAL LIMITS WITH THE OWNER'S REPRESENTATIVE AS NECESSARY TO COMPLETE THE WORK.
5. IT IS THE CONTRACTORS RESPONSIBILITY TO PROVIDE SHORING AS NECESSARY TO MAINTAIN THE ALIGNMENT AND STABILITY OF SLOPES, EXCAVATIONS, AND EXISTING STRUCTURES IMPACTED BY THE WORK. SUBMIT ALL SHORING PLANS WITH THE DEMOLITION AND DECONSTRUCTION PLAN IN ACCORDANCE WITH SPECIFICATION SECTION 02 41 00.
6. ALL MATERIAL DEMOLISHED OR REMOVED AND NOT SALVAGED AND/OR REINSTALLED SHALL BECOME THE PROPERTY OF THE CONTRACTOR AND SHALL BE DISPOSED OF OFF-SITE. MATERIAL SHALL BE DISPOSED OF IN ACCORDANCE WITH ALL LOCAL, STATE AND FEDERAL LAWS.
7. CONTRACTOR SHALL REMOVE MARINE GROWTH AND OTHER BOND INHIBITING SUBSTANCES FROM ALL SURFACES OF EXISTING STRUCTURES TO BE INTEGRATED WITH NEW WORK.
8. THE CONTRACTOR SHALL PROVIDE CONTROL MEASURES AS REQUIRED BY ENVIRONMENTAL REGULATIONS AND AS REQUIRED TO PREVENT DEBRIS FROM ENTERING THE WATER. UNDERWATER INSPECTIONS MAY BE CONDUCTED BY THE PORT TO ENSURE THE CONTRACTOR HAS REMOVED ALL DEMOLITION AND CONSTRUCTION DEBRIS FROM THE MUDLINE.
9. CONTRACTOR SHALL PREVENT THE SPREAD OF DUST AND DEBRIS AND AVOID THE CREATION OF A NUISANCE OR HAZARD IN THE SURROUNDING AREA. DO NOT USE WATER IF IT RESULTS IN HAZARDOUS OR OBJECTIONABLE CONDITIONS SUCH AS, BUT NOT LIMITED TO, FLOODING OR POLLUTION.
10. THE CONTRACTOR SHALL, ON A DAILY BASIS, REMOVE FROM THE SITE ANY EXCAVATED MATERIAL OR DEBRIS, UNLESS APPROVED FOR ON-SITE STORAGE. DISPOSAL OF ALL MATERIALS IS THE CONTRACTOR'S RESPONSIBILITY.
11. THE CONTRACTOR IS ADVISED THAT MATERIALS FOR REMOVAL MAY CONTAIN POTENTIALLY HAZARDOUS SUBSTANCES. HAZARDOUS MATERIAL TESTING WAS NOT COMPLETED. IT IS THE CONTRACTOR'S RESPONSIBILITY TO TEST MATERIAL AND DISPOSE OF PROPERLY. CONTRACTOR SHALL VERIFY AND VALIDATE THAT ALL MATERIALS REMOVED FROM THE SITE ARE CONTAMINANT FREE PRIOR TO DISPOSING OR RECYCLING OF ANY MATERIAL.
12. THE CONTRACTOR SHALL OBTAIN ALL NECESSARY PERMITS FROM THE CITY OF PORT ARTHUR FIRE DEPARTMENT FOR WELDING OR TORCH CUTTING WORK PERFORMED AT THE SITE.
13. WHERE PEDESTRIAN AND DRIVER SAFETY IS ENDANGERED IN THE AREA OF REMOVAL WORK, USE TRAFFIC BARRICADES. ANCHOR BARRICADES IN A MANNER TO PREVENT DISPLACEMENT BY WIND. NOTIFY PORT PERSONNEL AND THE OWNER'S REPRESENTATIVE PRIOR TO BEGINNING SUCH WORK.
14. THE CONTRACTOR SHALL REMOVE LOOSE AND DELETERIOUS MATERIAL FROM ALL SURFACES OF EXISTING STRUCTURES TO BE INTEGRATED WITH NEW WORK.

DREDGING:

1. REFER TO THE PERMIT DOCUMENTS INCLUDED IN THE PROJECT SPECIFICATIONS FOR ENVIRONMENTAL REQUIREMENTS DURING DREDGING AND APPROVED DREDGE MATERIAL PLACEMENT AREAS. DREDGING MAY BE COMPLETED USING EITHER MECHANICAL OR HYDRAULIC DREDGING METHODS. FOR BIDDING PURPOSES ASSUME DREDGE MATERIAL WILL BE DISPOSED OF IN DISPOSAL AREA 8, WITH BID ALTERNATES PROVIDED IN THE EVENT DISPOSAL IN AREAS 11, 9A, AND 9B IS REQUIRED INSTEAD OF AREA 8.
2. CONTRACTOR SHALL PERFORM PRE-DREDGE AND POST-DREDGE SURVEYS, AND MAINTAIN SURVEY CONTROL THROUGHOUT DREDGING TO ENSURE DREDGE ELEVATIONS ARE ESTABLISHED THROUGHOUT. REFER TO PROJECT SPECIFICATION SECTION 35 20 23.15 FOR ADDITIONAL DREDGING REQUIREMENTS.

EARTHWORK NOTES

1. ALL BACKFILL SHALL BE PROVIDED AND COMPACTED IN ACCORDANCE WITH PROJECT SPECIFICATION SECTION 31 23 00.00. BACKFILL SHALL BE FREE FROM ICE AND SNOW, ROOTS, SOD, RUBBISH AND OTHER DELETERIOUS OR ORGANIC MATTER.
2. SOILS EXCAVATED DURING CONSTRUCTION MAY BE USED AS BACKFILL PROVIDED THE GRADATIONS ARE MET AS REQUIRED AND THE MOISTURE CONTENT IS SUITABLE FOR COMPACTION, IN ACCORDANCE WITH THE PROJECT SPECIFICATIONS. SOILS NOT MEETING THE GRADATION REQUIREMENTS MAY BE USED AS BACKFILL AT THE DISCRETION OF THE OWNERS REPRESENTATIVE, PROVIDED THE REQUIRED COMPACTION CAN BE OBTAINED.
3. BASE COURSE FOR PAVEMENT SHALL BE A GRADED AGGREGATE FLEXIBLE BASE IN ACCORDANCE WITH PROJECT SPECIFICATIONS SECTION 31 23 00.00 20 EXCAVATION AND FILL.
4. GEOTEXTILE FOR DRAINAGE APPLICATIONS SHALL BE MIRAFI 160N NON-WOVEN GEOTEXTILE OR APPROVED EQUAL. GEOTEXTILE FOR SOIL SEPARATION SHALL BE MARAFI RS380i WOVEN GEOTEXTILE OR APPROVED EQUAL.
5. FABRIC FOR GEOGRID MAT LOAD TRANSFER PLATFORM SHALL BE STRATAGRID GS200 OR APPROVED EQUAL.
6. GENERAL TOPSIDE FEATURES IMPACTED BY THE WORK SHALL BE RE-GRADED AND RESTORED TO MATCH THE EXISTING CONDITIONS.

CODES AND REFERENCES:

1. ASCE 7-10 - MINIMUM DESIGN LOADS FOR BUILDINGS AND OTHER STRUCTURES
2. ASCE 7-1061-14 - MINIMUM DESIGN LOADS FOR BUILDINGS AND OTHER STRUCTURES SEISMIC DESIGN OF PIERS AND WHARVES
3. ASCE MANUAL OF PRACTICE NO. 129 - MOORING OF SHIPS TO PIERS AND WHARVES
4. TCM - AMERICAN INSTITUTE OF TIMBER CONSTRUCTION, TIMBER CONSTRUCTION MANUAL
5. IBC 2015 - INTERNATIONAL BUILDING CODE
6. UFC 4-151-10 - GENERAL CRITERIA FOR WATERFRONT CONSTRUCTION, WITH CHANGE 1.
7. UFC 4-152-01 - DESIGN: PIERS AND WHARVES, WITH CHANGE 1.
8. UFC 4-159-03 - DESIGN: MOORINGS, WITH CHANGE 1.
9. UFC 3-220-01A - DEEP FOUNDATIONS.
10. UFC 3-301-01 - STRUCTURAL ENGINEERING, WITH CHANGE 1 REVISED.
11. EM 1110-2-1100 - COASTAL ENGINEERING MANUAL
12. EM 1110-2-2504 - SHEET PILE DESIGN MANUAL
13. TXDOT STANDARD SPECIFICATIONS FOR CONSTRUCTION AND MAINTENANCE OF HIGHWAY STREETS, AND BRIDGES
14. EUROCODE 3 - DESIGN OF STEEL STRUCTURES - PART 5: PILING, EN 1993-5
15. AISC MANUAL OF STEEL CONSTRUCTION
16. ACI 318-14 - BUILDING CODE REQUIREMENTS FOR STRUCTURAL CONCRETE
17. ACI 357.3R-14 - GUIDE FOR DESIGN AND CONSTRUCTION OF WATERFRONT AND COAST CONCRETE MARINE STRUCTURES
18. ACI 360R-10, GUIDE TO DESIGN OF SLABS-ON-GROUND
19. TM 5-809-1/AM 88-3 CHAPTER 15, CONCRETE FLOOR SLABS ON GRADE SUBJECTED TO HEAVY LOADS, DEPARTMENTS OF THE ARMY AND AIR FORCE (TM 5-809)
20. TM 5-818-8 ENGINEERING USE OF GEOTEXTILES, DEPARTMENTS OF THE ARMY AND AIR FORCE (TM-5-818)
21. UFC 3-220-01A - DEEP FOUNDATIONS
22. DESIGN OF MARINE FACILITIES FOR THE BERTHING, MOORING, AND REPAIR OF VESSELS, JOHN W. GAYTHWAITE. 3RD EDITION
23. STEEL SHEET PILING DESIGN MANUAL, UNITED STATES STEEL (USS)
24. PIANC - GUIDELINES FOR THE DESIGN OF FENDER SYSTEMS: 2002 MARCOM REPORT OF WG33 (PIANC)NOAA ELEVATIONS ON STATION DATUMS - STATION 8770475, PORT ARTHUR, TEXAS, TIDAL EPOCH 1983-2001 (NOAA DATUMS)

ABBREVIATIONS:

∠	ANGLE	LF	LINEAR FEET
@	AT	LTP	LOAD TRANSFER PLATFORM (GEOGRID)
B	BASELINE	LW	LIGHTWEIGHT
BLDG	BUILDING	MAX	MAXIMUM
BTW	BETWEEN	MIN	MINIMUM
BOT	BOTTOM	OC	ON CENTER
℄	CENTER LINE	O.D.	OUTSIDE DIAMETER
CJ	CONSTRUCTION JOINT	PT	POINT
CONC	CONCRETE	QTY	QUANTITY
CIP	CAST-IN-PLACE	RAD	RADIUS
∅	DIAMETER	RI	RIGID INCLUSION
DWG	DRAWING	SF	SQUARE FEET
EA	EACH	SQ	SQUARE
ELEC	ELECTRIC	SS	STAINLESS STEEL
EW	EACH WAY	STA	STATION
EF	EACH FACE	SY	SQUARE YARD
EQ SP	EQUAL SPACING	T&B	TOP AND BOTTOM
EXIST	EXISTING	TYP	TYPICAL
EXP	EXPANSION	UG	UNDERGROUND
FNDN	FOUNDATION	VERT	VERTICAL
FT	FEET/FOOT		
HOR	HORIZONTAL		
I.D.	INSIDE DIAMETER		
IN	INCHES		
INV	INVERT		
LB	POUNDS		

DETAILS AND IDENTIFIERS:

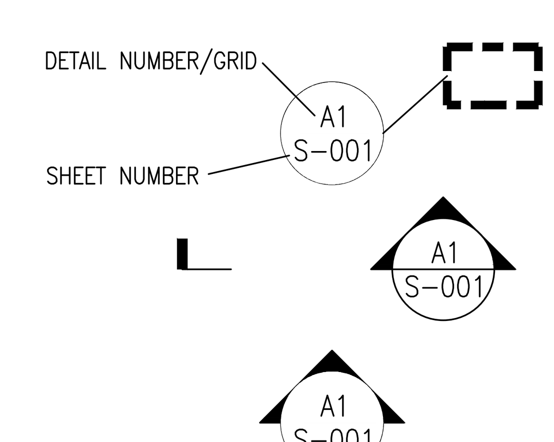

Berth 6 Expansion

PORT ARTHUR
Port of Port Arthur
P.O. Box 1428
Port Arthur, Texas 77641

COLLINS ENGINEERS INC
501 PROCTER ST., SUITE 324
PORT ARTHUR, TX 77640
409-895-2550
WWW.COLLINSENGR.COM
TX-FIRM F-9791

8/25/21

STATE OF TEXAS
MICHAEL J. SCHNEIDER
112407
LICENSED
PROFESSIONAL ENGINEER

COLLINS ENGINEERS, INC. SEAL
TEXAS REGISTERED ENGINEERING FIRM F-9791

REVISIONS

NO.	DESCRIPTION	DATE
2	ADDENDUM 2	8/25/21

FOR BIDDING ONLY
NOT FOR CONSTRUCTION

Designed by:	ZDJ
Drawn by:	BRB
Checked by:	WWM
Reviewed by:	MJS
Revisions by:	

PROJECT NO. 8.334
DATE: 06/23/2021

PORT OF PORT ARTHUR
BERTH 6 EXPANSION
PORT ARTHUR TX

GENERAL
GENERAL NOTES

DISCIPLINE/SHT NO
G-004
SHEET 4 OF 110

FILE NAME: \\nasuni-nh\nh\regular projects\15-10615.00 popa berth 6\06 - engineering\02 - drawings\working design drawings\G-004.dwg LAYOUT NAME: G-004 GENERAL NOTES PLOTTED: Wednesday, August 25, 2021 - 5:31pm USER: ghoyt

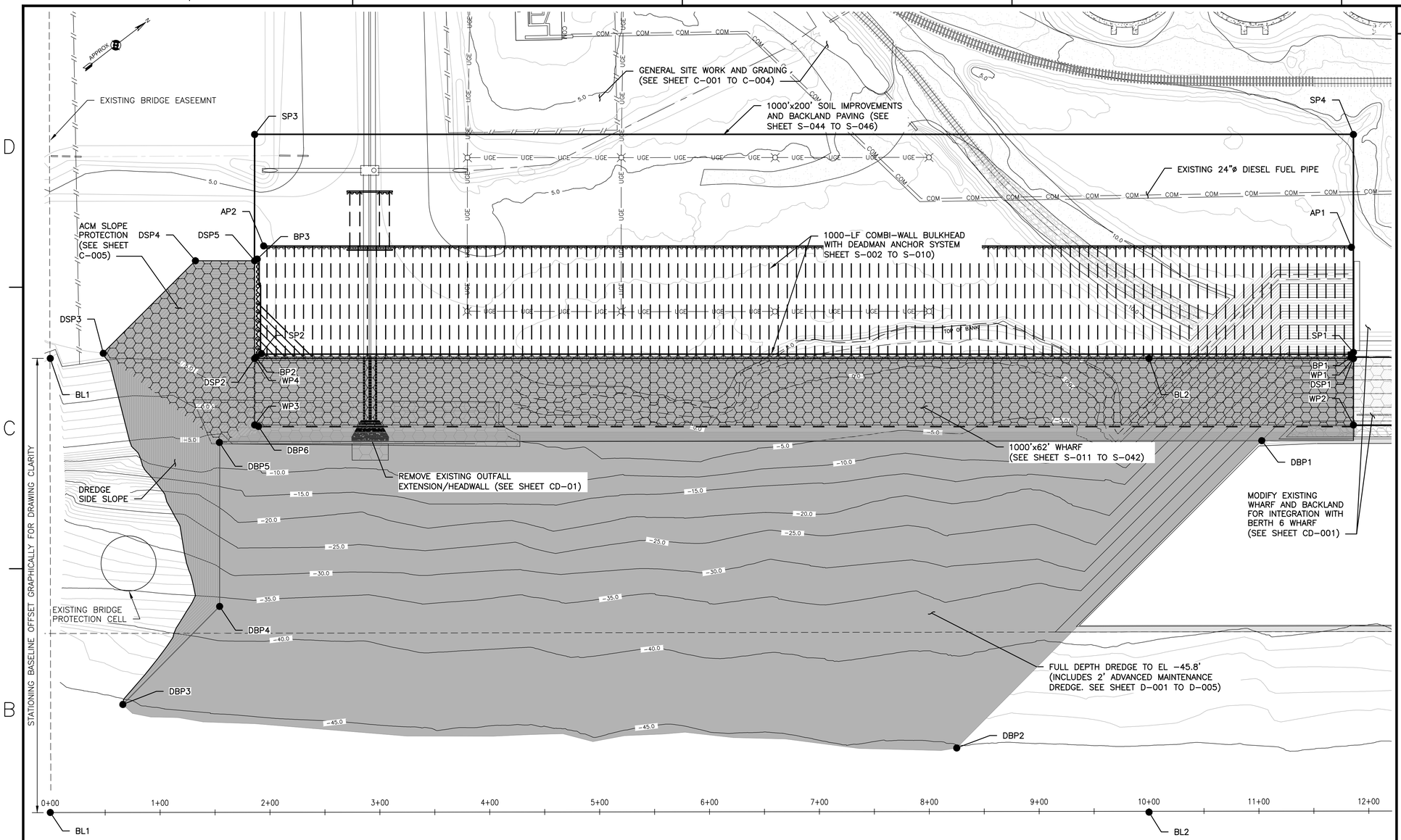

NOTES

1. EXISTING SURVEY DATA BASED ON PLAN TITLED TOPOGRAPHIC SURVEY AND HYDRO SURVEY, PORT OF PORT ARTHUR BERTH 6, COMPLETED BY SOUTEX SURVEYORS AND ENGINEERS, DECEMBER 22, 2017.
2. VERTICAL DATUM BASED ON NORTH AMERICAN VERTICAL DATUM OF 1988 (NAVD88).
3. HORIZONTAL DATUM BASED ON TEXAS STATE PLANE ZONE 4 COORDINATES (TEXAS SOUTH CENTRAL, FIPS 4204)
4. BERTH 5 WHARF EXPANSION WORK TO BE COMPLETED BY OTHERS, PRIOR TO COMMENCING BERTH 6 WORK. CONTOURS AND GEOMETRY SHOWN FOR BERTH 5 WORK IS BASED ON PROPOSED DRAWINGS AND MAY NOT REFLECT ACTUAL AS-BUILT CONDITIONS.

STATIONING BASELINE WORKING POINTS

POINT ID	NORTHING	EASTING	DESCRIPTION
BL1	13892769.32	3570154.58	STATION 0+00
BL2	13893561.66	3570764.66	STATION 10+00

WORK PLAN

SCALE: 1"=50'

0 50' 100'

PLAN NORTH

STRUCTURAL WORKING POINTS

POINT ID	NORTHING	EASTING	DESCRIPTION
WP1	13893708.84	3570881.11	NORTH CORNER OF WHARF
WP2	13893672.07	3570926.14	EAST CORNER OF WHARF
WP3	13892879.66	3570316.08	SOUTH CORNER OF WHARF
WP4	13892917.54	3570266.94	WEST CORNER OF WHARF
BP1	13893708.42	3570876.22	NORTHEAST END OF BULKHEAD
BP2	13892918.35	3570267.92	SOUTHWEST END OF BULKHEAD
BP3	13892974.23	3570198.32	END OF BULKHEAD RETURN
SP1	13893712.35	3570873.68	EAST CORNER OF BACKLAND SLAB
SP2	13892923.33	3570268.30	SOUTH CORNER OF BACKLAND SLAB
SP3	13893041.08	3570106.49	WEST CORNER OF BACKLAND SLAB
SP4	13893833.43	3570716.56	NORTH CORNER OF BACKLAND SLAB
AP1	13893768.53	3570798.04	NORTHEAST END OF ANCHOR WALL
AP2	13892985.65	3570193.94	SOUTHWEST END OF ANCHOR WALL

DREDGE WORKING POINTS

POINT ID	NORTHING	EASTING	DESCRIPTION
DBP1	13893597.18	3570886.61	NORTH CORNER OF DREDGE BASIN
DBP2	13893206.58	3570938.93	EAST CORNER OF DREDGE BASIN
DBP3	13892629.41	3570444.50	SOUTH CORNER OF DREDGE BASIN
DBP4	13892753.69	3570427.52	SOUTH INTERMEDIATE POINT OF DREDGE BASIN
DBP5	13892845.34	3570308.73	WEST CORNER OF DREDGE BASIN AT SLOPE
DBP6	13892879.72	3570316.07	WEST CORNER OF DREDGE BASIN AT WHARF
DSP1	13893708.97	3570878.20	NORTH CORNER OF DREDGE SLOPE
DSP2	13892916.63	3570268.13	SOUTH CORNER OF DREDGE SLOPE
DSP3	13892810.54	3570180.09	SOUTH INTERMEDIATE POINT OF DREDGE SLOPE
DSP4	13892928.23	3570164.73	WEST CORNER OF DREDGE SLOPE
DSP5	13892970.93	3570197.61	WEST INTERMEDIATE POINT OF DREDGE SLOPE

LEGEND:

	EXISTING MINOR CONTOUR (1-FT)
5	EXISTING MAJOR CONTOUR (5-FT)
	EXISTING FENCE
UGE	EXISTING UNDERGROUND ELECTRICAL UTILITY
COM	EXISTING UNDERGROUND TELECOMMUNICATION UTILITY
	EXISTING LIGHT POST
0+00	STATIONING (STATIONING GRAPHICALLY OFFSET FROM ACTUAL BASELINE. SEE BASELINE WORKING POINTS)
DBP1	WORKING POINT AND ID

Berth 6 Expansion

Port of Port Arthur
P.O. Box 1428
Port Arthur, Texas 77641

COLLINS ENGINEERS INC.
501 PROCTER ST., SUITE 324
PORT ARTHUR, TX 77640
409-895-2550
WWW.COLLINSENGR.COM
TX-FIRM F-9791

8/25/21
STATE OF TEXAS
MICHAEL J. SCHNEIDER
112407
LICENSED
PROFESSIONAL ENGINEER

COLLINS ENGINEERS, INC. SEAL
TEXAS REGISTERED ENGINEERING FIRM F-9791

REVISIONS

NO.	DESCRIPTION	DATE
1	ADDENDUM 2	8/25/21

FOR BIDDING ONLY
NOT FOR CONSTRUCTION

Designed by:	ZDJ
Drawn by:	BRB
Checked by:	WWM
Reviewed by:	MJS
Revisions by:	

PROJECT NO. 8.334
DATE: 06/23/2021

PORT OF PORT ARTHUR

BERTH 6 EXPANSION

PORT ARTHUR TX

GENERAL

WORK PLAN

DISCIPLINE/SHT NO G-007

SHEET 7 OF 110

DRAWFORM REVISION: 31 JANUARY 2017

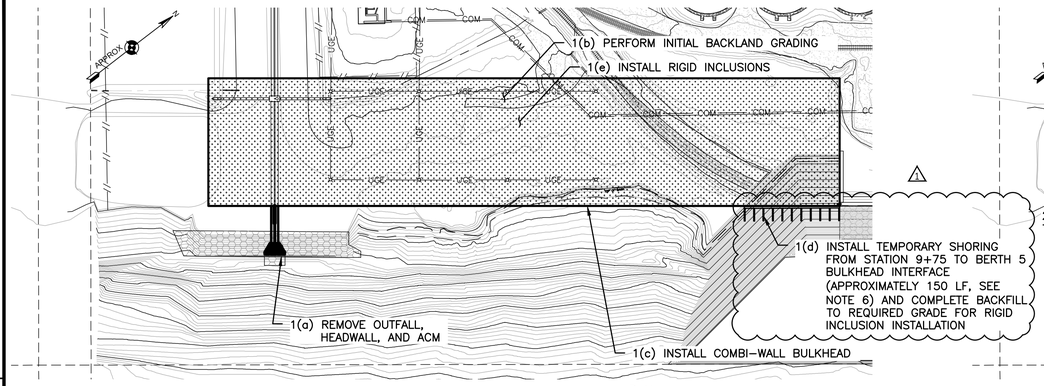

PLAN NORTH

PHASE 1 PLAN

SCALE: 1"=120'

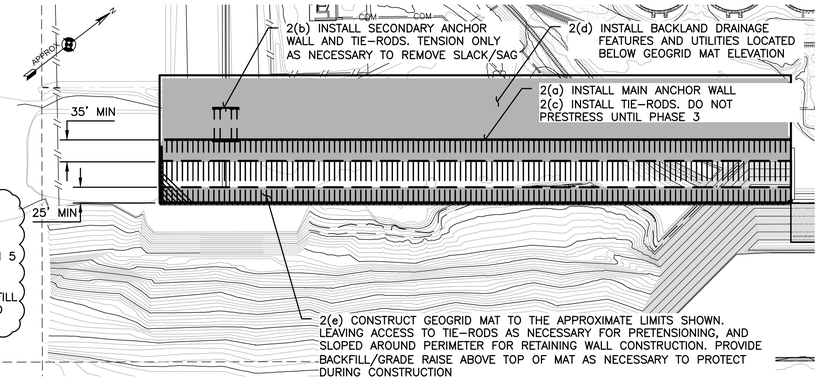

PLAN NORTH

PHASE 2 PLAN

SCALE: 1"=120'

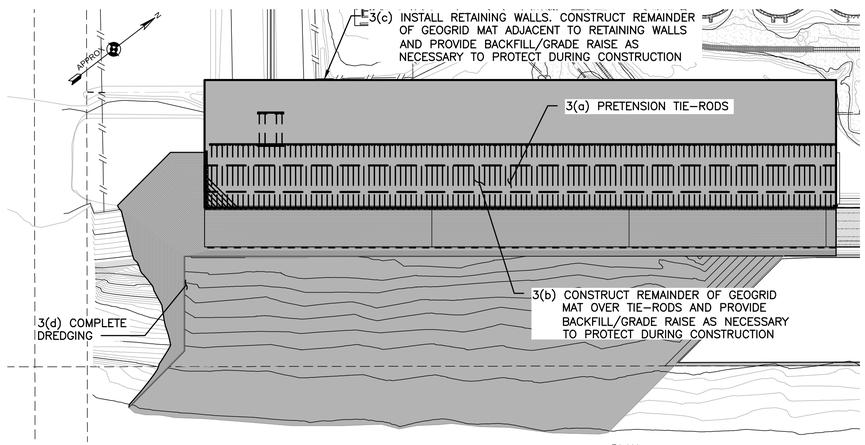

PLAN NORTH

PHASE 3 PLAN

SCALE: 1"=120'

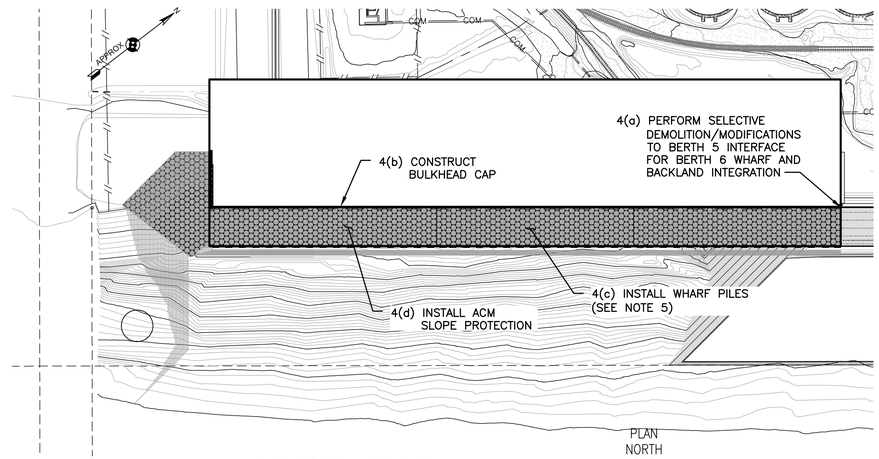

PLAN NORTH

PHASE 4 PLAN

SCALE: 1"=120'

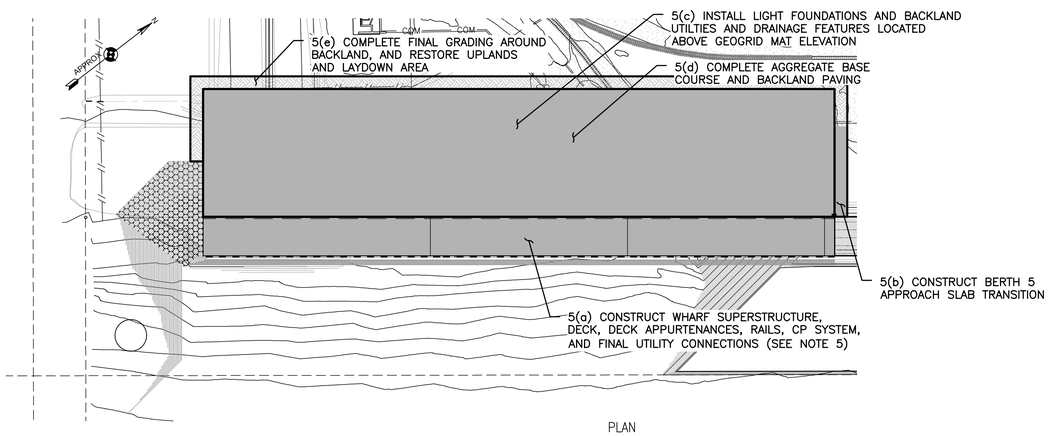

PLAN NORTH

PHASE 5 PLAN

SCALE: 1"=120'

SEE NOTE 5

LEGEND:

	EXISTING MINOR CONTOUR (1-FT)
5	EXISTING MAJOR CONTOUR (5-FT)
// // // //	EXISTING FENCE
UGE UGE UGE	EXISTING UNDERGROUND ELECTRICAL UTILITY
COM COM COM	EXISTING UNDERGROUND TELECOMMUNICATION UTILITY
	EXISTING LIGHT POST

NOTES

1. EXISTING SURVEY DATA BASED ON PLAN TITLED TOPOGRAPHIC SURVEY AND HYDRO SURVEY, PORT OF PORT ARTHUR BERTH 6, COMPLETED BY SOUTEX SURVEYORS AND ENGINEERS, DECEMBER 22, 2017.
2. VERTICAL DATUM BASED ON NORTH AMERICAN VERTICAL DATUM OF 1988 (NAVD88).
3. HORIZONTAL DATUM BASED ON TEXAS STATE PLANE ZONE 4 COORDINATES (TEXAS SOUTH CENTRAL, FIPS 4204)
4. BERTH 5 WHARF EXPANSION WORK TO BE COMPLETED BY OTHERS, PRIOR TO COMMENCING BERTH 6 WORK. CONTOURS AND GEOMETRY SHOWN FOR BERTH 5 WORK IS BASED ON PROPOSED DRAWINGS AND MAY NOT REFLECT ACTUAL AS-BUILT CONDITIONS.
5. CONTRACTOR SHALL SEQUENCE CONSTRUCTION STARTING FROM BERTH 5, MOVING WEST, ALLOWING THE PORT USE OF THE FIRST 328 FEET UPON ITS SUBSTANTIAL COMPLETION. THIS IS NOT INTENDED TO INHIBIT THE CONTRACTOR FROM PROGRESSING TO SUBSEQUENT PORTIONS OF THE PROJECT PRIOR TO COMPLETING THE FIRST SEGMENT, BUT TO PRIORITIZE SEQUENCING FROM EAST TO WEST SO THE PORT MAY USE THE FIRST 328' AT THE EARLIEST PRACTICAL POINT DURING CONSTRUCTION. CONTRACTOR SHALL ENSURE UNFINISHED AREAS ARE PROTECTED FROM DAMAGE UNTIL THE PROJECT IS COMPLETE.
6. FOR BIDDING PURPOSES, ASSUME A MINIMUM LATERAL BRACING LOAD OF 15 KLF (ALLOWABLE) IS REQUIRED FOR SHORING, APPLIED AT ELEVATION 7.0' ON THE COMBI-WALL. THIS IS BASED ON THE ALLOWABLE CONSTRUCTION LOADS DURING RIGID INCLUSION OPERATIONS SHOWN ON SHEET G-004. FOR BACKFILL PLACED IN DEWATERED CONDITIONS, SHORING SHALL ALSO BE DESIGNED FOR ALL APPLICABLE HYDROSTATIC LOADS RESULTING FROM DEWATERING. ACTUAL SHORING DESIGN SHALL BE PROVIDED BY THE CONTRACTOR AND DESIGNED AND SEALED BY A STRUCTURAL ENGINEER LICENSED IN THE STATE OF TEXAS.
7. ALTERNATIVE PHASING PLANS DEVELOPED BY THE CONTRACTOR MAY BE SUBMITTED FOR CONSIDERATION. ALTERNATIVE PHASING PLANS REQUIRE APPROVAL FROM THE OWNER'S REPRESENTATIVE.

1

Berth 6 Expansion

Port of PORT ARTHUR

Port of Port Arthur
P.O. Box 1428
Port Arthur, Texas 77641

COLLINS ENGINEERS INC
501 PROCTER ST., SUITE 324
PORT ARTHUR, TX 77640
409-895-2550
WWW.COLLINSENGR.COM
TX-FIRM F-9791

8/25/21

STATE OF TEXAS
MICHAEL J. SCHNEIDER
112407
LICENSED
PROFESSIONAL ENGINEER

COLLINS ENGINEERS, INC. SEAL
TEXAS REGISTERED ENGINEERING FIRM F-9791

REVISIONS

NO.	DESCRIPTION	DATE
1	ADDENDUM 2	8/25/21

FOR BIDDING ONLY
NOT FOR CONSTRUCTION

Designed by:	ZDJ
Drawn by:	BRB
Checked by:	WWM
Reviewed by:	MJS
Revisions by:	

PROJECT NO. 8.334
DATE: 06/23/2021

PORT OF PORT ARTHUR

BERTH 6 EXPANSION

PORT ARTHUR TX

GENERAL

PHASING PLAN

DISCIPLINE/SHT NO G-009

SHEET 9 OF 110

DRAWFORM REVISION: 31 JANUARY 2017

N:\Regular Projects\15-10615.00 POPA Berth 6\06 - Engineering\02 - Drawings\Working Design Drawings\G-009.dwg, G-009 CONSTRUCTION PHASING PLAN, 8/26/2021 4:37:56 PM, File Location, File Location

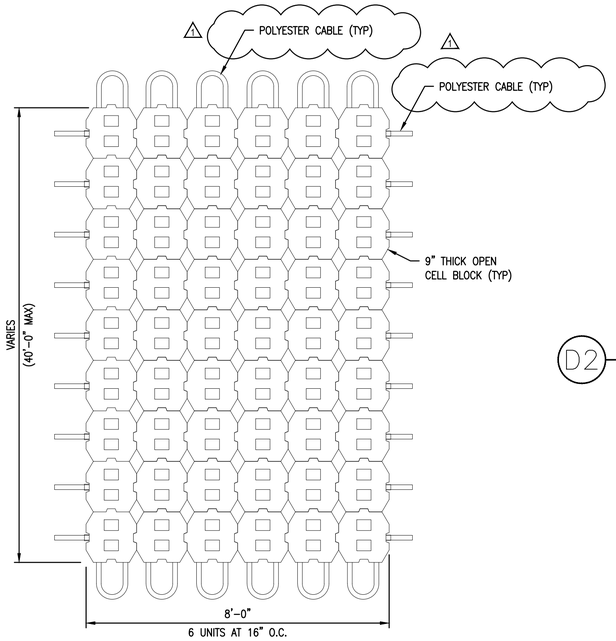

C1 TYPICAL MAT ASSEMBLY
SCALE: ½"=1'-0"

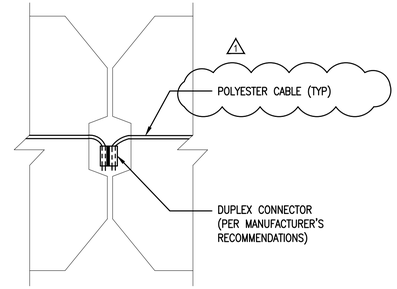

D2 CONNECTOR DETAIL
NTS

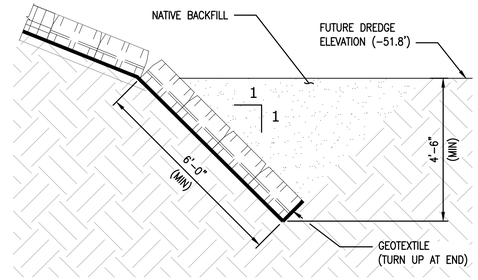

D3 TOE ANCHOR DETAIL
NTS

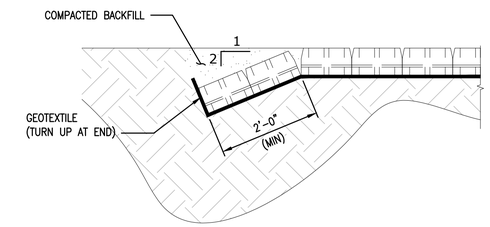

D4 SIDE SLOPE ANCHOR DETAIL
SCALE: ½"=1'-0"

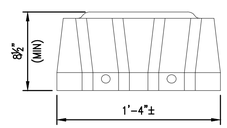

C2 TYPICAL BLOCK DETAIL
SCALE: 3/16"=1'-0"

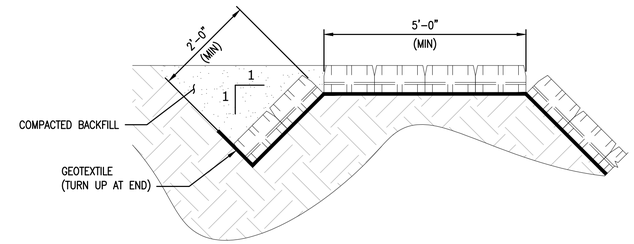

C3 TOP SLOPE ANCHOR DETAIL
SCALE: ½"=1'-0"

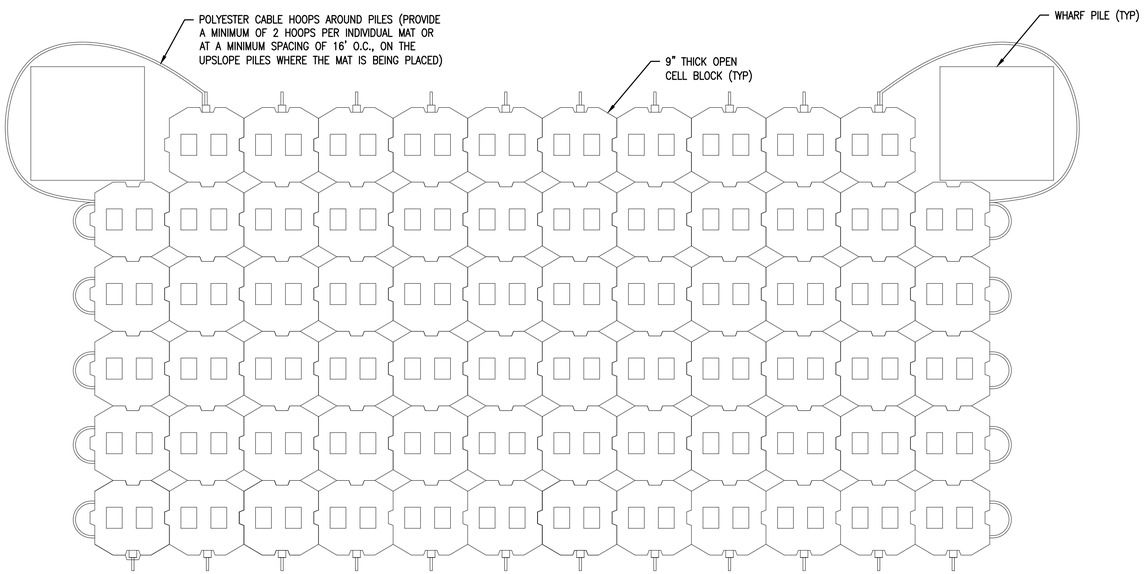

A1 PILE CABLE HOOP DETAIL
SCALE: ¾"=1'-0"

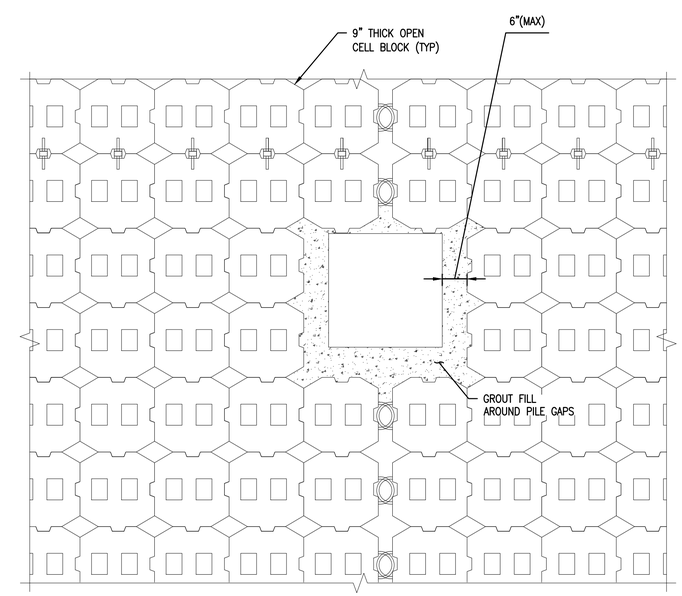

A4 PILE INTERFACE DETAIL
SCALE: ¾"=1'-0"

Berth 6 Expansion

Port of Port Arthur
P.O. Box 1428
Port Arthur, Texas 77641

COLLINS ENGINEERS INC
501 PROCTER ST., SUITE 324
PORT ARTHUR, TX 77640
409-895-2550
WWW.COLLINSENGR.COM
TX-FIRM F-9791

8/25/21
STATE OF TEXAS
MICHAEL J. SCHNEIDER
112407
LICENSED PROFESSIONAL ENGINEER
COLLINS ENGINEERS, INC. SEAL
TEXAS REGISTERED ENGINEERING FIRM F-9791

REVISIONS

NO.	DESCRIPTION	DATE
1	ADDENDUM 2	8/25/21

FOR BIDDING ONLY
NOT FOR CONSTRUCTION

Designed by:	ZDJ
Drawn by:	BRB
Checked by:	WWM
Reviewed by:	MJS
Revisions by:	

PROJECT NO. 8.334
DATE: 06/23/2021

PORT OF PORT ARTHUR
BERTH 6 EXPANSION
PORT ARTHUR TX

CIVIL

SHORELINE STABILIZATION DETAILS

DISCIPLINE/SHT NO C-007
SHEET 35 OF 110

DRAWFORM REVISION: 31 JANUARY 2017

FILE NAME: \\vasuni-wh\wh\regular projects\15-10615.00 popa berth 6\06 - engineering\02 - drawings\working design drawings\C-006.dwg LAYOUT NAME: C-007 SHORELINE STABILIZATION DETAILS PLOTTED: Wednesday, August 25, 2021 - 5:31pm USER: ghoyt

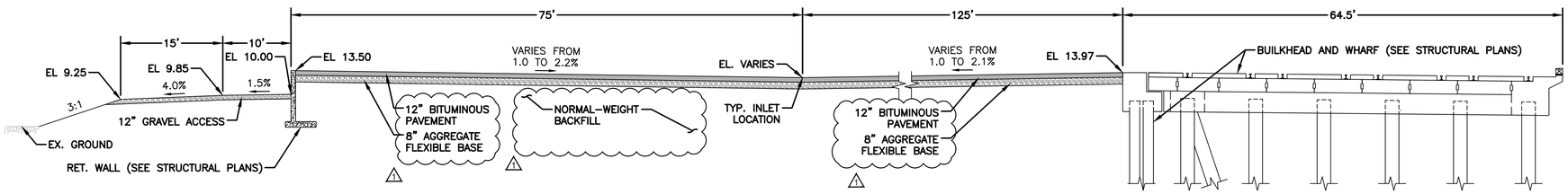

SITE GRADING TYPICAL SECTION (C1)

SCALE: 1"=10' 0 10' 20' C-003 C-004

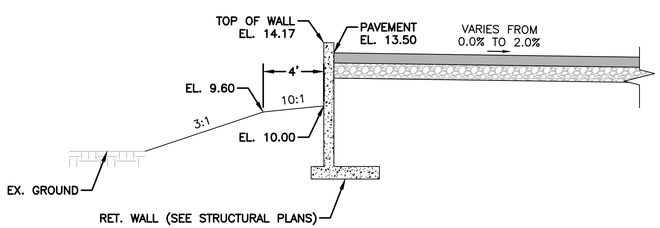

TYPICAL SECTION AT WEST END (C2)

SCALE: 1"=5' 0 5 10 C-003

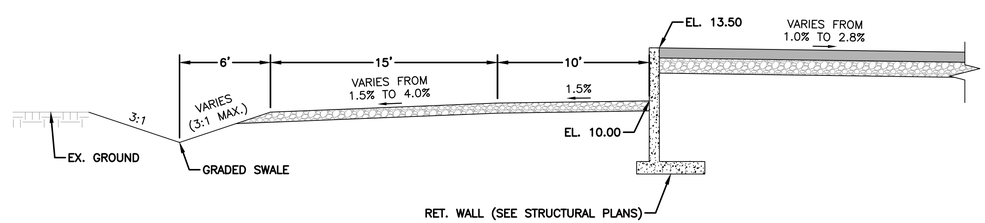

TYPICAL SECTION AT EAST END (C3)

SCALE: 1"=5' 0 5 10 C-004

NOTES

Berth 6 Expansion

Port of Port Arthur
P.O. Box 1428
Port Arthur, Texas 77641

COLLINS ENGINEERS INC
501 PROCTER ST., SUITE 321
PORT ARTHUR, TX 77640
409-895-2550
WWW.COLLINSENGR.COM
TX-FIRM F-9791

SEAL

8/25/21

STATE OF TEXAS
MICHAEL J. SCHNEIDER
112407
LICENSED
PROFESSIONAL ENGINEER

COLLINS ENGINEERS, INC.
TEXAS REGISTERED ENGINEERING FIRM F-9791

REVISIONS

NO.	DESCRIPTION	DATE
1	ADDENDUM 2	8/25/21

FOR BIDDING ONLY
NOT FOR CONSTRUCTION

Designed by:	KPW
Drawn by:	JCG
Checked by:	RAT
Reviewed by:	ZDJ
Revisions by:	

PROJECT NO. 8.334
DATE: 06/23/2021

PORT OF PORT ARTHUR

BERTH 6 EXPANSION

PORT ARTHUR TX

CIVIL

SITE GRADING TYPICAL SECTIONS

DISCIPLINE/SHT NO. C-008

SHEET 36 OF 110

DRAWFORM REVISION: 31 JANUARY 2017

FILE NAME: W:\Projects\10615 - POPA Berth 6\CAD\Sheet Drawings\C-008 Grading Sections.dwg LAYOUT NAME: C-008 PLOTTED: Thursday, August 26, 2021 - 9:47pm USER: zjenkins

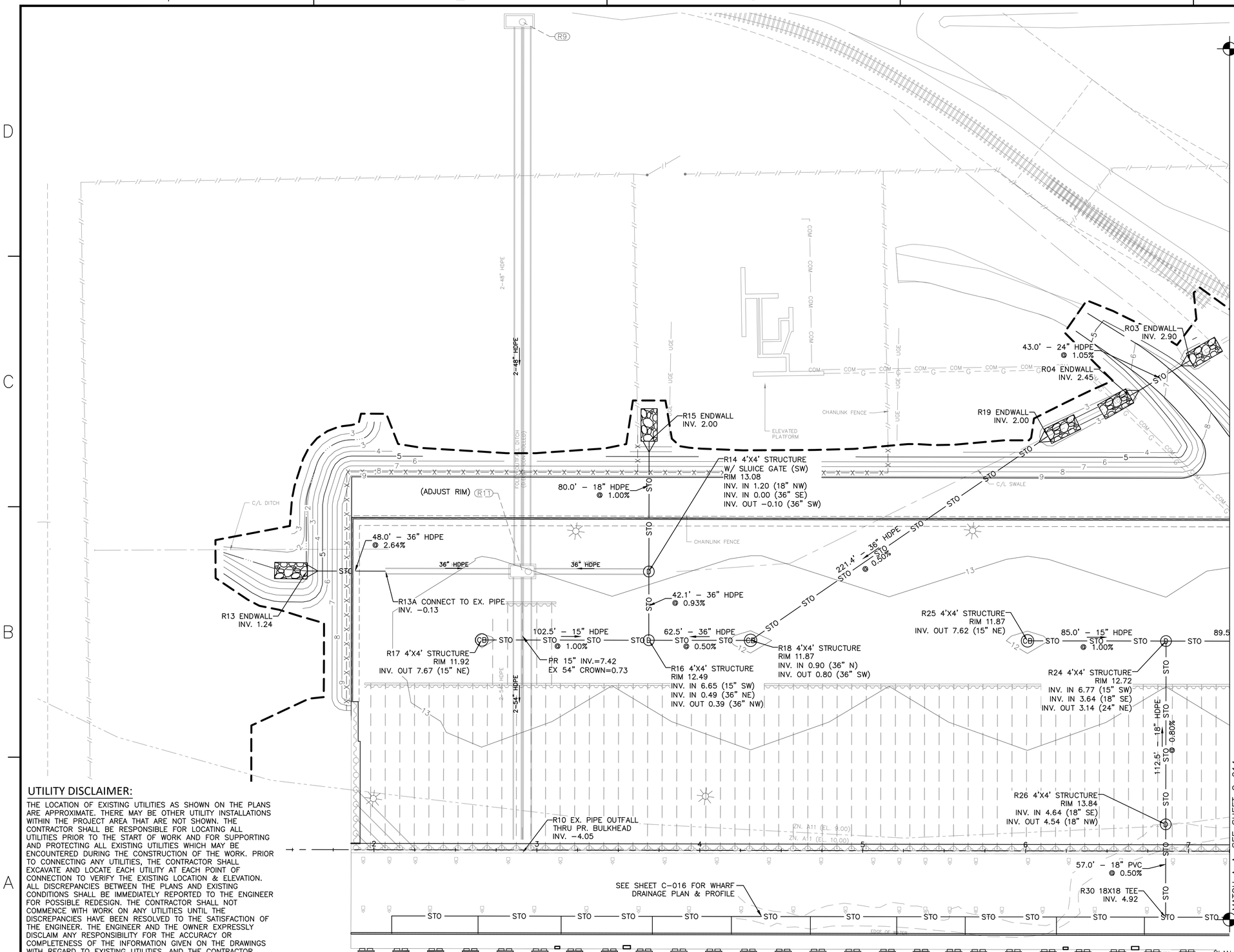

DRAINAGE PLAN - 1

SCALE: 1"=30'

0 30' 60'

UTILITY DISCLAIMER:

THE LOCATION OF EXISTING UTILITIES AS SHOWN ON THE PLANS ARE APPROXIMATE. THERE MAY BE OTHER UTILITY INSTALLATIONS WITHIN THE PROJECT AREA THAT ARE NOT SHOWN. THE CONTRACTOR SHALL BE RESPONSIBLE FOR LOCATING ALL UTILITIES PRIOR TO THE START OF WORK AND FOR SUPPORTING AND PROTECTING ALL EXISTING UTILITIES WHICH MAY BE ENCOUNTERED DURING THE CONSTRUCTION OF THE WORK. PRIOR TO CONNECTING ANY UTILITIES, THE CONTRACTOR SHALL EXCAVATE AND LOCATE EACH UTILITY AT EACH POINT OF CONNECTION TO VERIFY THE EXISTING LOCATION & ELEVATION. ALL DISCREPANCIES BETWEEN THE PLANS AND EXISTING CONDITIONS SHALL BE IMMEDIATELY REPORTED TO THE ENGINEER FOR POSSIBLE REDESIGN. THE CONTRACTOR SHALL NOT COMMENCE WITH WORK ON ANY UTILITIES UNTIL THE DISCREPANCIES HAVE BEEN RESOLVED TO THE SATISFACTION OF THE ENGINEER. THE ENGINEER AND THE OWNER EXPRESSLY DISCLAIM ANY RESPONSIBILITY FOR THE ACCURACY OR COMPLETENESS OF THE INFORMATION GIVEN ON THE DRAWINGS WITH REGARD TO EXISTING UTILITIES, AND THE CONTRACTOR SHALL NOT BE ENTITLED TO ANY EXTRA COMPENSATION ON ACCOUNT OF INACCURACY OR INCOMPLETENESS OF SUCH INFORMATION.

NOTES

1. INLET AND MANHOLE COORDINATES ARE TO THE CENTER OF STRUCTURE UNLESS NOTED OTHERWISE. SEE SHEET C-014 FOR COORDINATES.
2. NEW DRAIN OUTFALL LINE LOCATIONS MAY BE ADJUSTED UP TO 3' HORIZONTALLY TO AVOID INTERFERENCES WITH RIGID INCLUSIONS AND TIE RODS. REVISE INCIDENTAL DRAINAGE LINES AND SLOPES AS NECESSARY TO COORDINATE WITH ADJUSTMENTS IN THE OUTFALL LINE LOCATIONS.

1

SURVEY CONTROL DATA:
8" CONC. MONUMENT
WITH TXDOT CAP
N: 13,893,114.38
E: 3,570,387.48
ELEV: 6.10

LEGEND

100	PROPOSED 5' CONTOUR (BERTH 6 CONSTRUCTION)
99	PROPOSED 1' CONTOUR (BERTH 6 CONSTRUCTION)
	LIMIT OF DISTURBANCE
	RETAINING WALL
STO	PROPOSED STORM SEWER
D	PROPOSED DRAINAGE MANHOLE
CB	PROPOSED DRAINAGE INLET
C-5/R-2	EXISTING/PROPOSED STRUCTURE NAME

Berth 6 Expansion

Port of PORT ARTHUR

Port of Port Arthur
P.O. Box 1428
Port Arthur, Texas 77641

COLLINS ENGINEERS INC
501 PROCTER ST., SUITE 321
PORT ARTHUR, TX 77640
409-895-2550
WWW.COLLINSENGR.COM
TX-FIRM F-9791

SEAL

8/25/21

STATE OF TEXAS
MICHAEL J. SCHNEIDER
112407
LICENSED
PROFESSIONAL ENGINEER

COLLINS ENGINEERS, INC.
TEXAS REGISTERED ENGINEERING FIRM F-9791

REVISIONS

NO.	DESCRIPTION	DATE
1	ADDENDUM 2	8/25/21

FOR BIDDING ONLY
NOT FOR CONSTRUCTION

Designed by:	KPW
Drawn by:	JCG
Checked by:	RAT
Reviewed by:	ZDJ
Revisions by:	

PROJECT NO. 8.334
DATE: 06/23/2021

PORT OF PORT ARTHUR

BERTH 6 EXPANSION

PORT ARTHUR TX

CIVIL

DRAINAGE PLAN - 1

DISCIPLINE/SHT NO
C-012

SHEET 40 OF 110

DRAWFORM REVISION: 31 JANUARY 2017

FILE NAME: \\cxtouch-nt\w\Projects\10615 - popa berth 6\CAD\sheet drawings\C-012 Drainage Plan.dwg LAYOUT NAME: C-012 PLOTTED: Wednesday, August 25, 2021 - 5:54pm USER: ghoyt

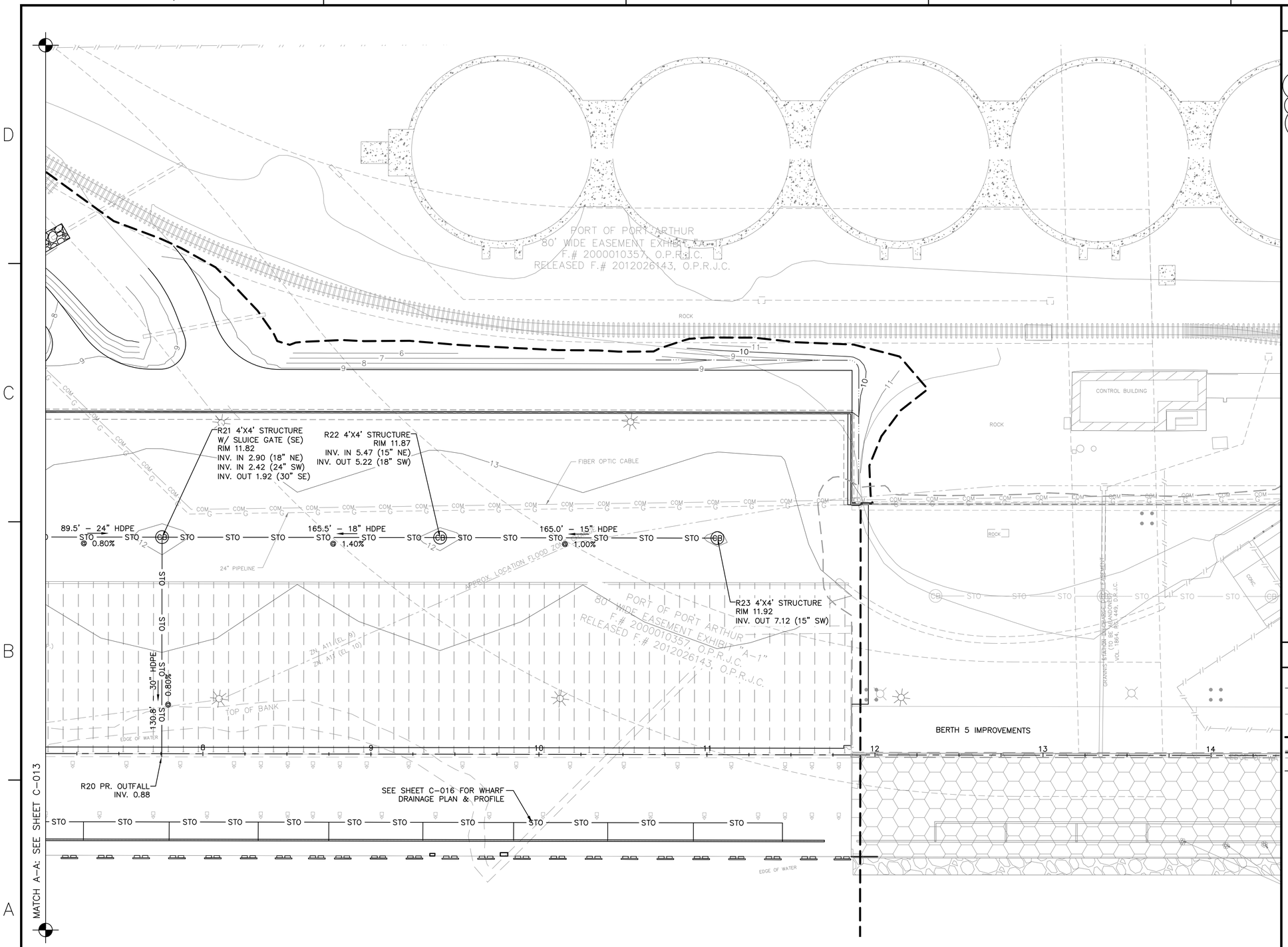

NOTES

1. INLET AND MANHOLE COORDINATES ARE TO THE CENTER OF STRUCTURE UNLESS NOTED OTHERWISE. SEE SHEET C-014 FOR COORDINATES.
2. NEW DRAIN OUTFALL LINE LOCATIONS MAY BE ADJUSTED UP TO 3' HORIZONTALLY TO AVOID INTERFERENCES WITH RIGID INCLUSIONS AND TIE RODS. REVISE INCIDENTAL DRAINAGE LINES AND SLOPES AS NECESSARY TO COORDINATE WITH ADJUSTMENTS IN THE OUTFALL LINE LOCATIONS.

1

SURVEY CONTROL DATA:
8" CONC. MONUMENT
WITH TXDOT CAP
N: 13,893,114.38
E: 3,570,387.48
ELEV: 6.10

LEGEND

100	PROPOSED 5' CONTOUR (BERTH 6 CONSTRUCTION)
99	PROPOSED 1' CONTOUR (BERTH 6 CONSTRUCTION)
	LIMIT OF DISTURBANCE
	RETAINING WALL
STO	PROPOSED STORM SEWER
D	PROPOSED DRAINAGE MANHOLE
CB	PROPOSED DRAINAGE INLET
(C-5)/(R-2)	EXISTING/PROPOSED STRUCTURE NAME

UTILITY DISCLAIMER:

THE LOCATION OF EXISTING UTILITIES AS SHOWN ON THE PLANS ARE APPROXIMATE. THERE MAY BE OTHER UTILITY INSTALLATIONS WITHIN THE PROJECT AREA THAT ARE NOT SHOWN. THE CONTRACTOR SHALL BE RESPONSIBLE FOR LOCATING ALL UTILITIES PRIOR TO THE START OF WORK AND FOR SUPPORTING AND PROTECTING ALL EXISTING UTILITIES WHICH MAY BE ENCOUNTERED DURING THE CONSTRUCTION OF THE WORK. PRIOR TO CONNECTING ANY UTILITIES, THE CONTRACTOR SHALL EXCAVATE AND LOCATE EACH UTILITY AT EACH POINT OF CONNECTION TO VERIFY THE EXISTING LOCATION & ELEVATION. ALL DISCREPANCIES BETWEEN THE PLANS AND EXISTING CONDITIONS SHALL BE IMMEDIATELY REPORTED TO THE ENGINEER FOR POSSIBLE REDESIGN. THE CONTRACTOR SHALL NOT COMMENCE WITH WORK ON ANY UTILITIES UNTIL THE DISCREPANCIES HAVE BEEN RESOLVED TO THE SATISFACTION OF THE ENGINEER. THE ENGINEER AND THE OWNER EXPRESSLY DISCLAIM ANY RESPONSIBILITY FOR THE ACCURACY OR COMPLETENESS OF THE INFORMATION GIVEN ON THE DRAWINGS WITH REGARD TO EXISTING UTILITIES, AND THE CONTRACTOR SHALL NOT BE ENTITLED TO ANY EXTRA COMPENSATION ON ACCOUNT OF INACCURACY OR INCOMPLETENESS OF SUCH INFORMATION.

DRAINAGE PLAN - 2

SCALE: 1"=30'

PLAN NORTH

0 30' 60'

Berth 6 Expansion

Port of Port Arthur
P.O. Box 1428
Port Arthur, Texas 77641

COLLINS ENGINEERS INC
501 PROCTER ST., SUITE 321
PORT ARTHUR, TX 77640
409-895-2550
WWW.COLLINSENGR.COM
TX-FIRM F-9791

SEAL

8/25/21

STATE OF TEXAS
MICHAEL J. SCHNEIDER
112407
LICENSED
PROFESSIONAL ENGINEER

COLLINS ENGINEERS, INC.
TEXAS REGISTERED ENGINEERING FIRM F-9791

REVISIONS

NO.	DESCRIPTION	DATE
1	ADDENDUM 2	8/25/21

FOR BIDDING ONLY
NOT FOR CONSTRUCTION

Designed by:	KPW
Drawn by:	JCG
Checked by:	RAT
Reviewed by:	ZDJ
Revisions by:	

PROJECT NO. 8.334
DATE: 06/23/2021

PORT OF PORT ARTHUR

BERTH 6 EXPANSION

PORT ARTHUR TX

CIVIL

DRAINAGE PLAN - 2

DISCIPLINE/SHT NO C-013

SHEET 41 OF 110

DRAWFORM REVISION: 31 JANUARY 2017

FILE NAME: \\crosunix-nt\wk\Projects\10615 - ppoa berth 6\CAD\sheet drawings\C-012 Drainage Plan.dwg LAYOUT NAME: C-013 PLOTTED: Wednesday, August 25, 2021 - 5:54pm USER: ghoyt

CONCRETE NOTES:

1. CAST-IN-PLACE CONCRETE SHALL BE IN ACCORDANCE WITH SECTION 03 31 00.00 CAST-IN-PLACE CONCRETE.

2. ALL CAST-IN-PLACE CONCRETE SHALL ADHERE TO THE FOLLOWING STRENGTH REQUIREMENTS

ELEMENT	CLASS	COMPRESSIVE STRENGTH (PSI)(W/C RATIO =.40 UON)
TRANSITION TO BERTH 5 WHARF	S	5000
TRANSITION TO BERTH 5 APPROACH SLAB	S	5000
RETAINING WALL AND LIGHT POLES	C	4500 (.45)
WHARF SUPERSTRUCTURE	S	5000
BULKHEAD CAP AND PENETRATIONS	S	5000
DECK PLANK TOPPING	S	5000
MISCELLANEOUS CONSTRUCTION	C	4500 (.45)
UTILITY: PIPE BLOCKS AND THRUST BLOCKS	A	2000 (.60)
UTILITY: OTHER	A	2000 (.60)
CRANE RAIL POCKETS (LEAN CONCRETE BASE)	LCB	1000 (.60)
MISCELLANEOUS CONSTRUCTION	C	4500 (.45)

3. PRECAST STRUCTURAL CONCRETE SHALL APPLY TO CONCRETE PILES AND THE WHARF DECK PLANKS. PRECAST STRUCTURAL CONCRETE SHALL BE IN ACCORDANCE WITH SPECIFICATION SECTION 03 45 33 AND 31 62 13.20 AS APPLICABLE.

4. ALL CONCRETE CONSTRUCTION AND DETAILING SHALL CONFORM TO THE APPLICABLE SPECIFICATION SECTION AND THE LATEST EDITION OF ACI 318.

5. MAINTAIN 3" CLEAR COVER TO ALL REINFORCING STEEL AND EMBEDDED ITEMS, UNLESS OTHERWISE NOTED.

6. EXPOSED CONCRETE EDGES SHALL HAVE A 3/4" CHAMFER, UNLESS OTHERWISE NOTED.

7. CONCRETE SURFACES SHALL BE COVERED AND MOIST CURED FOR A PERIOD OF NOT LESS THAN SEVEN (7) FULL DAYS AFTER CONCRETE PLACEMENTS.

8. REVIEW DRAWINGS FROM OTHER DISCIPLINES AND COORDINATE ALL OPENINGS AND EMBEDDED ITEMS SUCH AS SLEEVES, ANCHORS, CONDUITS, RAIL CONNECTIONS, ETC. THAT WILL BE INCORPORATED IN THE CONCRETE WORK.

9. CONTRACTOR SHALL UTILIZE NON-DESTRUCTIVE EQUIPMENT TO LOCATE STEEL REINFORCEMENT PRIOR TO FIELD DRILLING.

10. CONCRETE JOINTS SHALL BE LOCATED AS SHOWN ON THE DRAWINGS UNLESS NOTED OTHERWISE. EXPOSED EDGES SHALL BE TOOLED, UNLESS OTHERWISE NOTED. CONSTRUCTION JOINTS OTHER THAN THOSE SHOWN ON THE DRAWINGS MAY BE PROVIDED WITH WRITTEN APPROVAL FROM THE OWNER'S REPRESENTATIVE.

11. CONCRETE TOPPING SHALL BE FINISHED USING CARPET DRAG TECHNIQUES IN ACCORDANCE WITH TEXAS DOT STANDARD SPECIFICATIONS ITEM 422.

12. THE WHARF DESIGN INCORPORATES PRECAST CONCRETE DECK PLANKS TO IMPROVE QUALITY CONTROL AND FACILITATE DECK CONSTRUCTION. THE CONTRACTOR MAY PROPOSE AN ALTERNATIVE CAST-IN-PLACE SYSTEM, PROVIDED THAT IT MEETS THE MINIMUM DESIGN LOADING CRITERIA, PERFORMANCE, AND HAS A MINIMUM 50-YR SERVICE LIFE. IMPLEMENTATION OF A CAST-IN-PLACE SYSTEM IS SUBJECT TO APPROVAL FROM THE PORT.

13. CONTRACTOR IS ADVISED THAT CAST-IN-PLACE CONCRETE WORK INCLUDED IN THIS PROJECT CONTAINS AREAS THAT ARE CONSIDERED MASS CONCRETE AND REQUIRES ASSOCIATED MEASURES FOR PLACEMENT AND CURING OF MASS CONCRETE STRUCTURES. REFER TO SPECIFICATION SECTION 03 45 33 FOR FURTHER INFORMATION ON REQUIREMENTS FOR MASS CONCRETE. CONTRACTOR MAY ALTERNATIVELY PROPOSE ADDITIONAL CONSTRUCTION JOINTS, WHICH WILL BE SUBJECT TO APPROVAL BY THE PORT. CONSTRUCTION JOINTS SHALL BE DESIGNED BY A PROFESSIONAL ENGINEER LICENSED IN THE STATE OF TEXAS, TO ENSURE SUFFICIENT LOAD TRANSFER THROUGH THE JOINT AND PROVIDE SUPPLEMENTARY STEEL AS NECESSARY. SUPPLEMENTARY STEEL RESULTING FROM IMPLEMENTATION OF CONSTRUCTION JOINTS WILL BE PROVIDED BY THE CONTRACTOR AT NO ADDITIONAL COST TO THE PORT. CONSTRUCTION JOINTS SHALL BE SUBMITTED FOR APPROVAL PRIOR TO ORDERING MATERIALS AND PERFORMING ASSOCIATED ELEMENTS OF WORK.

STRUCTURAL STEEL NOTES:

1. ALL STEEL PLATES AND ANGLES SHALL BE ASTM A36, UNLESS NOTED OTHERWISE. STEEL PIPE SHALL BE ASTM A53, GRADE B. ROLLED STEEL SHAPES SHALL BE ASTM A572, GRADE 50 KSI. SEE STEEL COATING NOTES FOR COATING REQUIREMENTS.

2. ALL STRUCTURAL STEEL CONSTRUCTION SHALL BE IN ACCORDANCE WITH THE LATEST EDITION OF THE AISC STEEL CONSTRUCTION MANUAL.

3. ALL WELDING SHALL BE IN ACCORDANCE WITH THE REQUIREMENTS OF THE STRUCTURAL WELDING CODE D1.1 OF THE AMERICAN WELDING SOCIETY (AWS), LATEST EDITION. ELECTRODES SHALL BE E70XX LOW HYDROGEN IN ACCORDANCE WITH AWS SPECIFICATIONS. ALL WELDERS SHALL BE CERTIFIED IN ACCORDANCE WITH THE REQUIREMENTS OF THE AMERICAN WELDING SOCIETY, ANSI/AWS D1.1, PART 5.

4. ALL STEEL-TO-STEEL BOLTED CONNECTIONS SHALL BE MADE WITH ASTM A449 TYPE 1 HIGH STRENGTH BOLTS. NUTS SHALL BE ASTM A563, GRADE A, HEX STYLE AND THE WASHERS SHALL BE ASTM F436.

5. ALL STEEL ANCHOR RODS EMBEDDED IN CONCRETE SHALL BE EITHER ASTM A449 TYPE 1 BOLTS, OR ASTM F1554 THREADED ROD, GRADE 105, AS APPLICABLE.

6. ALL BOLTS, THREADED RODS, NUTS AND WASHERS SHALL BE HOT-DIP GALVANIZED, IN ACCORDANCE WITH THE PROJECT SPECIFICATIONS.

1

7. TIE-RODS SHALL BE GRADE 75/80 KSI ALL-THREAD BAR IN ACCORDANCE WITH ASTM A615. ALL COUPLERS, TURNBUCKLES, CONNECTIONS, AND OTHER TIE-ROD SYSTEM COMPONENTS SHALL BE AS SPECIFIED BY THE MANUFACTURER AND SHALL DEVELOP 100% OF THE BARS ULTIMATE TENSILE STRENGTH AND DUCTILITY. BARS AND CONNECTION COMPONENTS SHALL BE EPOXY COATED IN ACCORDANCE WITH ASTM A775. OTHER TIE-ROD SYSTEM ELEMENTS SHALL BE EITHER EPOXY COATED IN ACCORDANCE WITH ASTM A775 OR COATED WITH COAL-TAR EPOXY, AS APPLICABLE.

STEEL COATING NOTES:

1. PROVIDE COATINGS AS FOLLOWS, AND IN ACCORDANCE WITH SPECIFICATION SECTION 09 97 13.00:
   a. PLATES AND ANGLES — HOT-DIP GALVANIZED UNLESS OTHER COATING SYSTEM IS SPECIFIED
   b. ROLLED SHAPES — TWO PART COAL TAR EPOXY-POLYAMIDE COATING
   c. TIE RODS — EPOXY IN ACCORDANCE WITH ASTM A775
   d. COMBI-WALL PILING — TWO PART COAL TAR EPOXY-POLYAMIDE COATING
   e. BOLTS, NUTS, WASHERS — HOT-DIP GALVANIZED
2. APPLY COATINGS IN STRICT ACCORDANCE WITH MANUFACTURER'S INSTRUCTIONS. RE-COAT DAMAGED COATINGS AT NO ADDITIONAL COST TO THE GOVERNMENT.
3. APPLY TWO COATS OF THE COAL TAR EPOXY-POLYAMIDE SYSTEM. EACH COAT MUST BE APPLIED AT A DRY FILM THICKNESS OF NOT LESS THAN 10 MILS. THE TOTAL PAINT SYSTEM MUST HAVE A MINIMUM FINAL DRY FILM THICKNESS OF 20 MILS MEASURED USING A MAGNETIC GAGE.
4. PROVIDE GALVANIZING IN ACCORDANCE WITH ASTM A123, ASTM A153, AND F2329 AS APPLICABLE.
5. PROVIDE 50' MINIMUM COATING LENGTH COMBI-WALL PILING (BOTH SIDE OF SHEET PILE) AND FULL LENGTH COATING BOTH SIDES FOR ANCHOR WALL SHEET PILING.

STEEL PILE BULKHEAD NOTES:

1. ALL STEEL SHEET PILING SHALL BE HOT-ROLLED STEEL AND CONFORM TO ASTM A690, GRADE 50 KSI STEEL IN ACCORDANCE WITH SPECIFICATION SECTION 31 41 16 STEEL SHEET PILE BULKHEAD. PIPE PILES SHALL BE IN ACCORDANCE WITH ASTM A252 GRADE 3 (SEAMLESS, STRAIGHT SEAM, OR SPIRAL WELDED). ALL MATERIAL SHALL BE NEW. BULKHEAD PILES SHALL BE THE FOLLOWING, OR AN APPROVED EQUAL:

1

   a. MAIN COMBI-WALL PIPE (PAZ42): 42"ø x 0.625"
   b. MAIN COMBI-WALL SHEET PILE: NZ 22
   c. COMBI-WALL RETURN WALL PIPE (PAZ42 SECTION): 42"ø x 0.625"
   d. COMBI-WALL RETURN WALL PIPE (PAZ36 SECTION): 36"ø x 0.500"
   e. COMBI-WALL RETURN WALL SHEET PILE: NZ 22
   f. ANCHOR WALL: NZ 28

2. THE CONTRACTOR SHALL PROVIDE DETAILS OF PILE DRIVING EQUIPMENT. THE DRIVING EQUIPMENT AND METHOD SHALL BE APPROVED BY THE CONTRACTING OFFICER. NO JETTING WILL BE PERMITTED.

3. ALL PILINGS SHALL BE MARKED AT A GIVEN DISTANCE FROM THE BOTTOM, WHICH WILL SHOW ABOVE THE WATERLINE AFTER DRIVING, SO THAT THE BOTTOM ELEVATION OF EACH PILE AND ITS RELATION WITH ADJACENT PILES CAN BE RECORDED.

4. SPLICES WILL NOT BE PERMITTED WITHOUT SPECIAL AUTHORIZATION FROM THE OWNER'S REPRESENTATIVE.

5. DO NOT DRIVE PILING WITHIN 50 FEET OF CONCRETE LESS THAN 72 HOURS OLD.

6. CUT OFF PORTIONS OF PILINGS SHALL BE REMOVED AND DISPOSED OF OFF-SITE BY THE CONTRACTOR.

7. DRIVE PILING TO THE MINIMUM ELEVATIONS AS SHOWN ON THE DRAWINGS WITHIN TOLERANCES AS SPECIFIED.

8. PILES SHALL BE DRIVEN PLUMB AND TRUE TO LINE. MAXIMUM HORIZONTAL DEVIATION FROM THE INTENDED WALL LINE SHALL BE A 1/8-IN. BATTER PER VERTICAL FOOT, BUT SHALL NOT EXCEED MORE THAN 6-IN OVER THE TOTAL LENGTH OF THE PILE.

9. CUT OFF, OR BURN OFF SQUARE, THE TOPS OF STEEL SHEET PILINGS AT THE TOP ELEVATION SHOWN ON THE CONTRACTOR'S APPROVED SHOP DRAWINGS, ONLY AFTER TOE ELEVATION OF PILES HAS BEEN DETERMINED AND RECORDED.

10. PILINGS WHICH ARE DAMAGED, MISLOCATED, OR DRIVEN OUT OF VERTICAL ALIGNMENT SHALL BE WITHDRAWN AND REPLACED BY NEW PILINGS AT NO ADDITIONAL COST TO THE GOVERNMENT.

11. PILINGS SHALL BE DRIVEN WITHIN APPROVED FALSE WORK OR APPROVED TEMPLATES.

12. CONTRACTOR SHALL INSTALL COVER PLATES OVER ANY LIFTING/HANDLING HOLES. COVER PLATES SHALL BE WELDED AND COMPLETELY COVER THE HOLES. SHEET PILE COATING SHALL BE REMOVED AT COVER PLATE LOCATIONS TO FACILITATE WELDING, AND SHALL BE FIELD COATED IN ACCORDANCE WITH THE SPECIFICATIONS AFTER WELDING.

13. BULKHEAD SYSTEM, INCLUDING THE BULKHEAD COMBI-WALL, RETURN WALL, TIE-BACK SYSTEM, ANCHOR WALL, AND INCIDENTAL WORK, SHALL BE INSTALLED IN ITS ENTIRETY PRIOR TO DREDGING. THIS INCLUDES PRETENSIONING THE TIE-RODS TO 140 KIPS. REFER TO THE PROJECT SPECIFICATIONS FOR PRETENSIONING REQUIREMENTS.

14. TIE-RODS SHALL BE PLACED IN HDPE SLEEVES AS SHOWN ON THE DRAWINGS AND PER THE PROJECT SPECIFICATIONS.

WELDING:

1. WELDING SHALL CONFORM TO ANSI/AWS D1.1, LATEST EDITION.

2. ALL WELDERS SHALL BE CERTIFIED IN ACCORDANCE WITH THE REQUIREMENTS OF THE AMERICAN WELDING SOCIETY, ANSI/AWS D1.1, PART 5.

REINFORCING STEEL:

1. ALL REINFORCING SHALL BE FABRICATED AND INSTALLED IN ACCORDANCE WITH CRSI MANUAL OF STANDARD PRACTICE.

2. ALL REINFORCING BARS SHALL BE GRADE 60 KSI DEFORMED REBAR IN ACCORDANCE WITH ASTM A615. WELDED REINFORCING SHALL BE IN ACCORDANCE WITH ASTM A706. ALL WELDED WIRE FABRIC SHALL BE IN ACCORDANCE WITH ASTM A184.

3. ALL REINFORCING SHALL BE FULLY SUPPORTED ON APPROVED PLASTIC CHAIRS AND/OR COATED STEEL. WHERE REINFORCING STEEL IS IN CONTACT WITH FORMS, SUPPORTS SHALL BE PLASTIC OR STAINLESS STEEL.

4. SPLICING OF REINFORCING STEEL OVER 20 FT IS PERMITTED. STAGGER SPLICES ONE SPLICE LENGTH MINIMUM. UNLESS OTHERWISE NOTED, NO MORE THAN 50 PERCENT OF THE REINFORCING STEEL SHALL BE SPLICED AT ANY LOCATION. PROVIDE SPLICE LENGTHS OF

BAR SIZE	MIN. SPLICE LENGTH
4	38"
5	47"
6	57"
7	82"
8	94"
9	106"
10	119"
11	133"

5. ALL HOOKS SHALL BE STANDARD ACI APPROVED HOOKS, UNLESS DIMENSIONED OTHERWISE ON THE DRAWINGS.

6. CONTRACTOR SHALL SUBMIT DETAILED REINFORCING DRAWINGS INCLUDING BAR AND BENDING SCHEDULES TO THE OWNER'S REPRESENTATIVE FOR REVIEW AND APPROVAL PRIOR TO FABRICATION OR DELIVERY OF ANY REINFORCING STEEL.

7. WHERE "DRILL AND GROUT" IS CALLED FOR IN THE DRAWING SET, GROUT SHALL CONFORM TO THOSE LISTED ON THE TEXAS DEPARTMENT OF TRANSPORTATION'S MATERIALS PRODUCTS LIST FOR "EPOXIES AND ADHESIVES" LIST FOR FAST SETTING GROUT FOR ANCHOR BOLTS OR APPROVED EQUIVALENT. CONTRACTOR MAY SUBMIT FOR APPROVAL MECHANICAL ANCHORS IN LIEU OF EPOXY ANCHOR, PROVIDED THAT THE MECHANICAL ANCHOR SYSTEM HAS EQUIVALENT PERFORMANCE AND CAPACITY OF THE EPOXY ANCHOR SYSTEM,

PRESTRESSED CONCRETE PILES:

1. PRESTRESSED PRECAST CONCRETE PILES SHALL SHALL BE 24" SQUARE, AS INDICATED ON THE DRAWINGS AND PILE SCHEDULE AND IN ACCORDANCE WITH SPECIFICATION SECTION 31 62 13.20.

2. ALL PRETENSIONING ELEMENTS SHALL BE ½"ø, UNCOATED, SEVEN-WIRE, LOW RELAXATION STEEL STRANDS AND SHALL CONFORM TO THE SPECIFICATIONS.

3. THE MINIMUM ULTIMATE TENSILE STRENGTH OF THE PRETENSIONING STRANDS SHALL BE 270 KSI. THE SPIRAL REINFORCING SHALL HAVE A MINIMUM YIELD STRENGTH OF 70 KSI. THE INITIAL TENSION PER ½"ø STRAND SHALL BE 29.5 KIPS.

4. MINIMUM CONCRETE COMPRESSIVE STRENGTH SHALL BE 6000 PSI AT 28 DAYS. CONCRETE SHALL HAVE AIR ENTRAINMENT PER THE SPECIFICATIONS.

5. NO PRESTRESS SHALL BE TRANSFERRED TO THE CONCRETE UNTIL IT HAS ATTAINED A COMPRESSIVE STRENGTH, AS SHOWN BY A CYLINDER TEST, OF AT LEAST 4,000 PSI.

6. THE FABRICATOR IS FULLY RESPONSIBLE FOR THE DESIGN OF THE LIFTING DEVICES WHICH SHALL BE ADEQUATE FOR THE SAFETY FACTORS REQUIRED BY THE ERECTION PROCEDURE.

1

7. ~~REINFORCEMENT BARS HALL BE EPOXY COATED.~~

8. ALL FOUR CORNERS OF PILES SHALL HAVE ¾" CHAMFERS.

9. PILE INSTALLATION SEQUENCING SHALL BE DETERMINED BY THE CONTRACTOR TO MINIMIZE PILE MOVEMENT RESULTING FROM DRIVING OF SUBSEQUENT PILES. REFER TO SPECIFICATION SECTION 31 62 13.20 FOR ADDITIONAL INFORMATION.

TIMBER NOTES:

1. TIMBER FOR THE BULLRAIL (CURB) SHALL BE PRESSURE TREATED NO. 2 SOUTHERN PINE, AND SHALL BE PRESSURE TREATED IN ACCORDANCE WITH THE LATEST AWPA STANDARDS FOR EXPOSURE TO SALT WATER SPLASH IN THE GULF COAST.

2. FIELD TREAT ALL CUT AND DRILLED TIMBER SURFACES WITH TWO COATS OF PRESERVATIVE CONTAINING COPPER NAPTHANATE SOLUTION (MIN 2% METALLIC SOLUTION) PER AWPA. ALLOW SUFFICIENT TIME AFTER FIRST TREATMENT FOR PRESERVATIVE TO SOAK IN (DRY APPEARANCE) BEFORE SECOND TREATMENT IS APPLIED. WOOD PRESERVATIVES ARE RESTRICTED-USE PESTICIDES AND SHALL BE APPLIED ACCORDING TO APPLICABLE STANDARDS. FIELD TREATMENT SHALL NOT BE APPLIED OVER WATER.

3. ALL TIMBER SIZES SHOWN ARE NOMINAL.

4. ALL TIMBER CONSTRUCTION SHALL CONFORM TO THE LATEST EDITION OF THE AMERICAN INSTITUTE OF TIMBER CONSTRUCTION, TIMBER CONSTRUCTION MANUAL.

5. ALL BOLTED CONNECTIONS SHALL BE MADE WITH ASTM A307, GRADE A BOLTS. TIMBER CONNECTIONS SHALL BE HOT DIPPED GALVANIZED IN ACCORDANCE WITH ASTM A153. ALL BOLTS SHALL BE SNUG TIGHT. PROVIDE DOCK WASHERS UNDER ALL BOLT HEADS AND NUTS BEARING ON TIMBER.

6. FILL TOP OF BULLRAIL NUT POCKETS WITH SEALANT AFTER TIGHTENING.

CONSTRUCTION LOADING AND SEQUENCING:

1. CONSTRUCTION LOADING WITHIN 50 FEET OF THE BULKHEAD AFTER INSTALLATION IS LIMITED TO A UNIFORM LIVE LOAD OF 1,000 PSF AND HS-20 TRUCK LOADS. BULKHEAD INSTALLATION CONSISTS OF THE COMPLETE BULKHEAD SYSTEM, INCLUDING BUT NOT LIMITED TO THE COMBI-WALL, TIE-BACKS, ANCHOR WALL, PRETENSIONING TIE RODS, RAISING THE GRADE AND INSTALLING THE GEOGRID MAT LTP TO THE BOTTOM OF THE PAVING BASE COURSE. EVALUATION FOR SUITABILITY OF HEAVIER WHEEL LOADS WITHIN 50 FEET OF THE BULKHEAD SYSTEM, CRANE LOADS, OR OTHER CONCENTRATED LOADS DURING CONSTRUCTION IN THIS AREA SHALL BE THE RESPONSIBILITY OF THE CONTRACTOR AND SUBJECT TO APPROVAL BY THE PORT.

2. DETERMINATION OF CONSTRUCTION LOADS, INCLUDING BUT NOT LIMITED TO UNIFORM LIVE LOADS, STORAGE LOADS, CRANE LOADS, WHEEL LOADS, AND OTHER CONCENTRATED LOADS ON EXISTING STRUCTURES, OR STRUCTURES ERECTED UNDER THIS CONTRACT SHALL BE THE RESPONSIBILITY OF THE CONTRACTOR, AND SUBJECT TO APPROVAL BY THE PORT.

FENDER SYSTEM:

1. THE FENDER PANELS SHOWN ON THE DRAWINGS ARE SHOWN TO INDICATE MINIMUM FENDER PANEL DIMENSIONS AND ASSOCIATED COMPONENTS FOR BIDDING PURPOSES. FENDER PANELS SHALL BE VERIFIED AND DESIGNED BY THE FENDER MANUFACTURER FOR THE DESIGN VESSELS.
2. FENDER MANUFACTURER SHALL DESIGN, FABRICATE, SUPPLY AND DELIVER TO THE CONTRACTOR ALL FENDER SYSTEM COMPONENTS REQUIRED FOR THE COMPLETE INSTALLATION OF THE FENDER PANEL SYSTEM BY THE CONTRACTOR, UNLESS OTHERWISE NOTED. FENDER SYSTEM TO INCLUDE FENDER PANEL WITH UHMW WEAR SURFACE, FENDER LEG ELEMENTS, AND FENDER HARDWARE (CHAINS, PAD EYES, CHAIN TENSIONERS, MISCELLANEOUS HARDWARE, AND BOLTS/NUTS/WASHERS REQUIRED).
3. FENDER PANEL SHALL BE DESIGNED BASED ON THE DESIGN CRITERIA SPECIFIED IN THIS DRAWINGS SET AND IN ACCORDANCE WITH SPECIFICATION SECTION 35 59 13.16 20.
4. FENDER PANEL SHALL BE CONSTRUCTED OF COATED STEEL FACED WITH UHMW POLYETHYLENE, CONFORMING TO THE FOLLOWING:
   a.1. ALL STRUCTURAL STEEL CONSTRUCTION SHALL BE IN ACCORDANCE WITH THE LATEST EDITION OF THE AISC.
   a.2. ALL WELDING SHALL BE IN ACCORDANCE WITH THE AWS D1.1 AND D3.6M. ELECTRODES SHALL BE E70XX LOW HYDROGEN IN ACCORDANCE WITH AWS SPECIFICATIONS.
   a.3. UHMW FACING SHALL BE BLACK, VIRGIN MATERIAL.
   a.4. ALL STRUCTURAL STEEL SHAPES AND PLATES SHALL BE ASTM A36 OR ASTM A572, GRADE 50.
   a.5. STRUCTURAL STEEL SHALL BE PAINTED WITH A TWO PART COAL TAR EPOXY-POLYAMIDE COATING.
5. FENDER ELEMENTS SHALL BE 1000MM LEG FENDERS WITH A MAXIMUM DESIGN REACTION FORCE OF 115 KIPS AND A MINIMUM DESIGN REACTION ENERGY OF 170 FT-KIPS (DESIGN RATED AT 52.5% DEFLECTION).
6. ALL FENDER HARDWARE INCLUDING WEIGHT CHAINS SHALL BE HOT DIPPED GALVANIZED IN ACCORDANCE WITH ASTM A123, F2329, OR A153 AS APPLICABLE.
7. CONTRACTOR SHALL INSTALL THE FENDER SYSTEM IN ACCORDANCE WITH MANUFACTURERS RECOMMENDATIONS AND INSTRUCTIONS AND IN ACCORDANCE WITH BID DRAWINGS AND SPECIFICATIONS.
8. CONTRACTOR SHALL FIELD VERIFY ALL PROPOSED WORK TO ENSURE INSTALLATION OF ALL CONTRACTOR SUPPLIED COMPONENTS AS SHOWN BEFORE ORDERING MATERIALS OR FABRICATION. DISCREPANCIES SHALL BE BROUGHT TO THE ATTENTION OF THE OWNER'S REPRESENTATIVE.

MOORING BOLLARDS:

1. MOORING BOLLARDS SHALL BE 200-TON STEEL DOUBLE-BITT BOLLARDS, MATCHING THE DIMENSIONS AND CONFIGURATION SHOWN ON THE DRAWINGS. BOLLARDS SHALL BE IN ACCORDANCE WITH SPECIFICATION SECTION 05 30 00.01.
2. BOLLARDS SHALL BE HIGH-STRENGTH STEEL CASTINGS IN ACCORDANCE WITH ASTM A27 GRADE 65-35.
3. BOLLARDS SHALL BE COATED WITH A THREE-PART EPOXY COATING SYSTEM IN ACCORDANCE WITH SPECIFICATION SECTION 05 30 00.01.
4. AFTER INSTALLATION, FILL NUT POCKETS WITH SEALANT IN ACCORDANCE WITH THE SPECIFICATION SECTION 05 30 00.01.
5. CONTRACTOR SHALL COORDINATE THE ACTUAL BOLLARD ANCHOR BOLT LAYOUT WITH THE BOLLARD FOUNDATION COMPONENTS PRIOR TO FABRICATION AND CONSTRUCTION.

Berth 6 Expansion

Port of PORT ARTHUR

Port of Port Arthur
P.O. Box 1428
Port Arthur, Texas 77641

COLLINS ENGINEERS INC
501 PROCTER ST., SUITE 324
PORT ARTHUR, TX 77640
409-895-2550
WWW.COLLINSENGR.COM
TX-FIRM F-9791

8/25/21

STATE OF TEXAS
MICHAEL J. SCHNEIDER
112407
LICENSED PROFESSIONAL ENGINEER

COLLINS ENGINEERS, INC. SEAL
TEXAS REGISTERED ENGINEERING FIRM F-9791

REVISIONS

NO.	DESCRIPTION	DATE
1	ADDENDUM 2	8/25/21

FOR BIDDING ONLY
NOT FOR CONSTRUCTION

Designed by:	ZDJ
Drawn by:	BRB
Checked by:	WWM
Reviewed by:	MJS
Revisions by:	

PROJECT NO. 8.334
DATE: 06/23/2021

PORT OF PORT ARTHUR

BERTH 6 EXPANSION

PORT ARTHUR TX

STRUCTURAL

STRUCTURAL NOTES

DISCIPLINE/SHT NO
S-001

SHEET 46 OF 110

DRAWFORM REVISION: 31 JANUARY 2017

FILE NAME: \\vasuni-wh\wh\regular projects\15-10615.00 popa berth 6\06 - engineering\02 - drawings\working design drawings\S-001.dwg LAYOUT NAME: S-001 STRUCTURAL NOTES PLOTTED: Wednesday, August 25, 2021 - 5:31pm USER: ghoyt

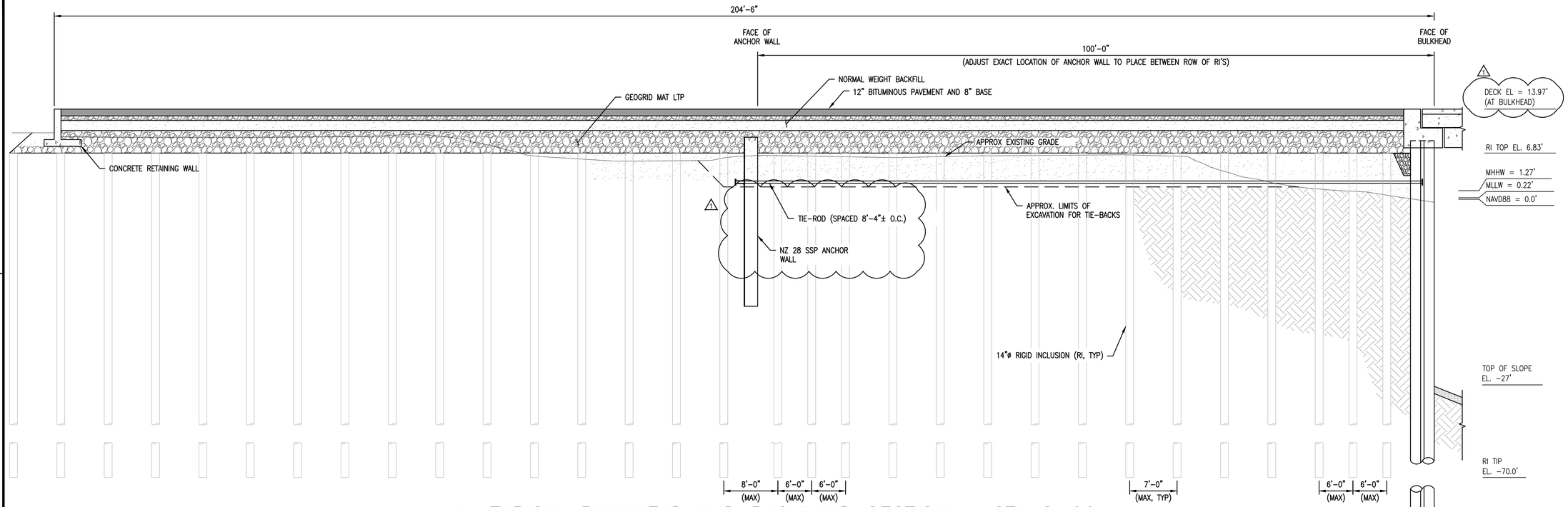

C1 TYPICAL BULKHEAD AND BACKLAND SECTION – STA 8+00

SCALE: ⅛"=1'-0"

0 4' 8' 16'

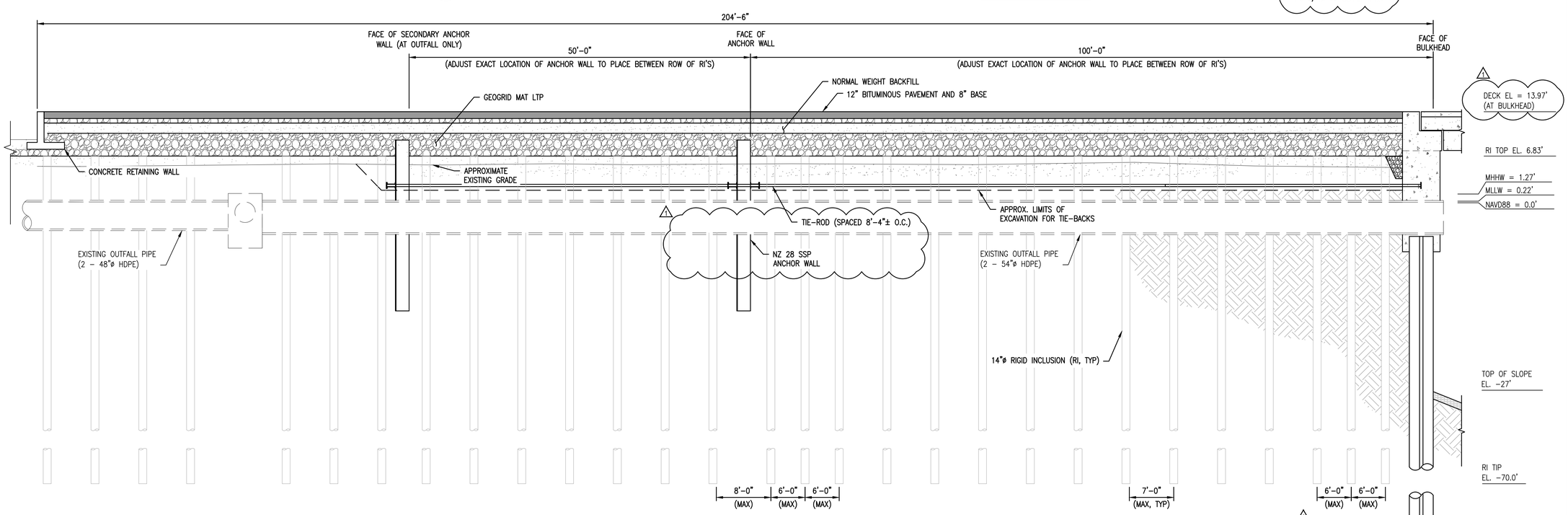

A1 BULKHEAD AND BACKLAND SECTION AT FOLEY OUTFALL – STA 2+90

SCALE: ⅛"=1'-0"

0 4' 8' 16'

Berth 6 Expansion

Port of Port Arthur
P.O. Box 1428
Port Arthur, Texas 77641

COLLINS ENGINEERS INC.
501 PROCTER ST., SUITE 324
PORT ARTHUR, TX 77640
409-895-2550
WWW.COLLINSENGR.COM
TX-FIRM F-9791

8/25/21

STATE OF TEXAS
MICHAEL J. SCHNEIDER
112407
LICENSED PROFESSIONAL ENGINEER

COLLINS ENGINEERS, INC. SEAL
TEXAS REGISTERED ENGINEERING FIRM F-9791

REVISIONS

NO.	DESCRIPTION	DATE
1	ADDENDUM 2	8/25/21

FOR BIDDING ONLY
NOT FOR CONSTRUCTION

Designed by:	ZDJ
Drawn by:	BRB
Checked by:	WWM
Reviewed by:	MJS
Revisions by:	

PROJECT NO. 8.334
DATE: 06/23/2021

PORT OF PORT ARTHUR

BERTH 6 EXPANSION

PORT ARTHUR TX

STRUCTURAL

BULKHEAD AND BACKLAND SECTIONS

DISCIPLINE/SHT NO
S-002

SHEET 47 OF 110

DRAWFORM REVISION: 31 JANUARY 2017

FILE NAME: \\cosun-mh\eng\projects\15-10615.00 ppa berth 6\06 - engineering\02 - drawings\working design drawings\S-002 S-004 S-017.dwg LAYOUT NAME: S-002 BULKHEAD AND BACKLAND SECTIONS PLOTTED: Wednesday, August 25, 2021 - 5:31pm USER: ghoyt

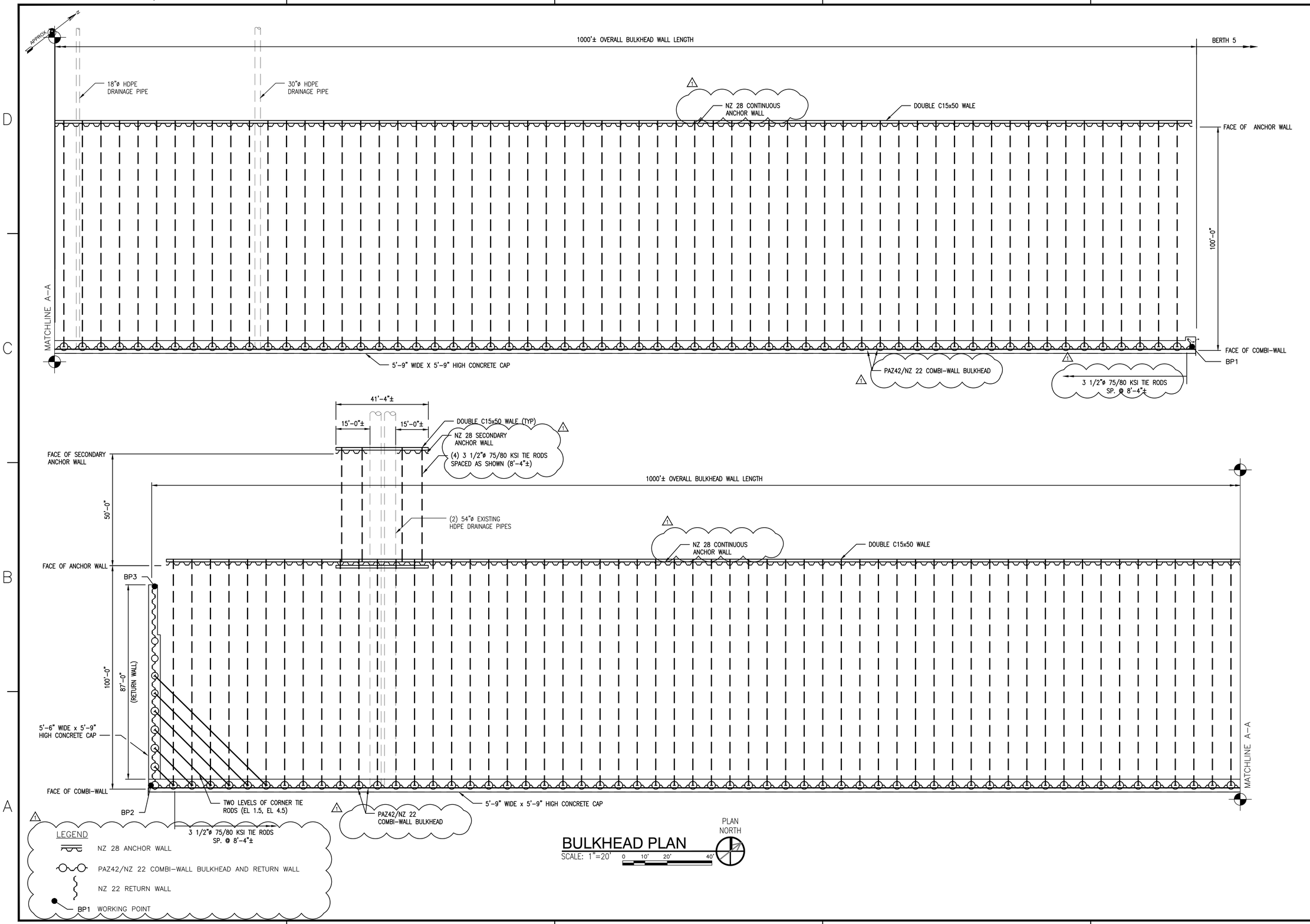

BULKHEAD PLAN

SCALE: 1"=20'

Berth 6 Expansion

Port of Port Arthur
P.O. Box 1428
Port Arthur, Texas 77641

COLLINS ENGINEERS INC
501 PROCTER ST., SUITE 324
PORT ARTHUR, TX 77640
409-895-2550
WWW.COLLINSENGR.COM
TX-FIRM F-9791

8/25/21

STATE OF TEXAS
MICHAEL J. SCHNEIDER
112407
LICENSED PROFESSIONAL ENGINEER

COLLINS ENGINEERS, INC. SEAL
TEXAS REGISTERED ENGINEERING FIRM F-9791

REVISIONS

NO.	DESCRIPTION	DATE
1	ADDENDUM 2	8/25/21

FOR BIDDING ONLY
NOT FOR CONSTRUCTION

Designed by:	ZDJ
Drawn by:	BRB
Checked by:	WWM
Reviewed by:	MJS
Revisions by:	

PROJECT NO. 8.334
DATE: 06/23/2021

PORT OF PORT ARTHUR

BERTH 6 EXPANSION

PORT ARTHUR TX

STRUCTURAL

BULKHEAD PLAN

DISCIPLINE/SHT NO
S-003

SHEET 48 OF 110

DRAWFORM REVISION: 31 JANUARY 2017

FILE NAME: \\vosuri-nt\nt\regular projects\15-10615.00 ppa berth 6\06 - engineering\02 - drawings\working design drawings\S-003.dwg LAYOUT NAME: S-003 BULKHEAD PLAN PLOTTED: Wednesday, August 25, 2021 - 5:31pm USER: gboyd

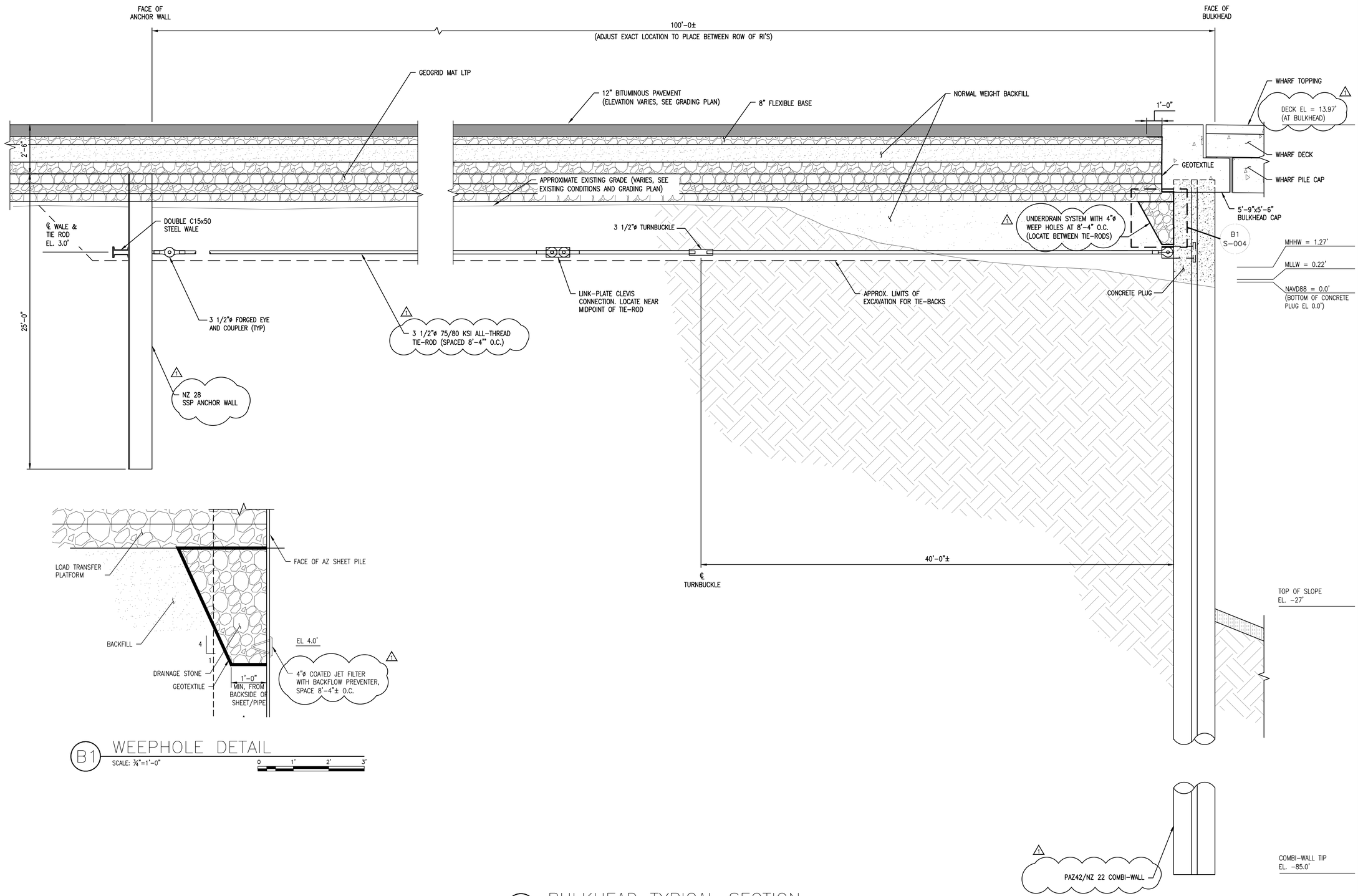

B1 WEEPHOLE DETAIL
SCALE: ¾"=1'-0"
0 1' 2' 3'

A1 BULKHEAD TYPICAL SECTION
SCALE: ¼"=1'-0"
NOTE: RIGID INCLUSIONS NOT SHOWN FOR CLARITY.
0 2' 4' 8'

Berth 6 Expansion

PORT of PORT ARTHUR

Port of Port Arthur
P.O. Box 1428
Port Arthur, Texas 77641

COLLINS ENGINEERS INC.
501 PROCTER ST., SUITE 324
PORT ARTHUR, TX 77640
409-895-2550
WWW.COLLINSENGR.COM
TX-FIRM F-9791

8/25/21
STATE OF TEXAS
MICHAEL J. SCHNEIDER
112407
LICENSED PROFESSIONAL ENGINEER
COLLINS ENGINEERS, INC. SEAL
TEXAS REGISTERED ENGINEERING FIRM F-9791

REVISIONS

NO.	DESCRIPTION	DATE
1	ADDENDUM 2	8/25/21

FOR BIDDING ONLY
NOT FOR CONSTRUCTION

Designed by:	ZDJ
Drawn by:	BRB
Checked by:	WWM
Reviewed by:	MJS
Revisions by:	

PROJECT NO. 8.334
DATE: 06/23/2021

PORT OF PORT ARTHUR
BERTH 6 EXPANSION
PORT ARTHUR TX

STRUCTURAL
BULKHEAD TYPICAL SECTION

DISCIPLINE/SHT NO
S-004
SHEET 49 OF 110

DRAWFORM REVISION: 31 JANUARY 2017

FILE NAME: \\vasuni-wh\wh\regular projects\15-10615.00 popa berth 6\06 - engineering\02 - drawings\working design drawings\S-002 S-004 S-017.dwg LAYOUT NAME: S-004 BULKHEAD TYPICAL SECTION PLOTTED: Wednesday, August 25, 2021 - 5:31pm USER: ghoyt

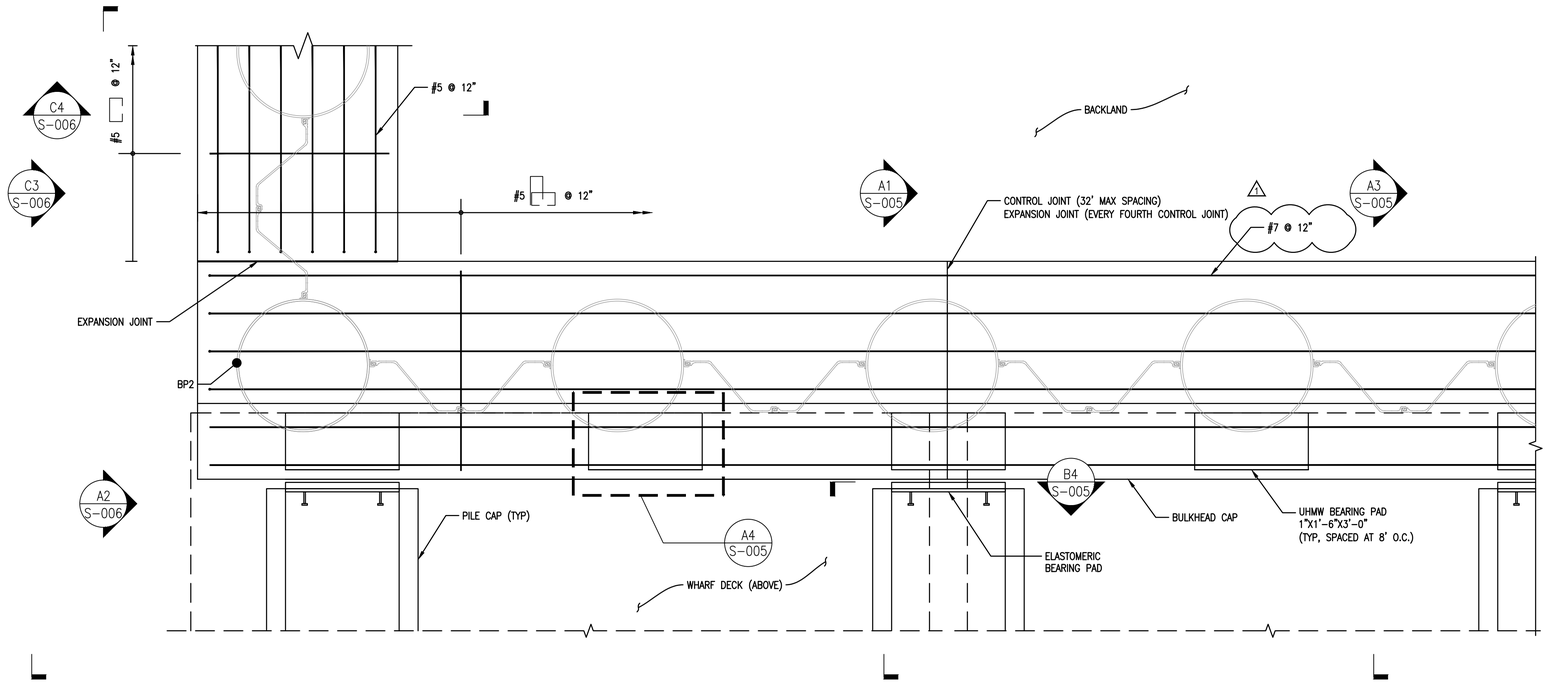

NOTES:

1. FORM PILE CAP AND BEARING PAD SO THAT A 1 1/2" TO 2" GAP IS PROVIDED BETWEEN THE ELASTOMERIC BEARING PAD AND THE BULKHEAD CAP FACE.
2. FASTEN UHMW BEARING PADS TO BULKHEAD CAP WITH (6) 1/2" x 4" ANCHOR BOLTS, COUNTER SUNK 1/2". PROVIDE 6" EDGE SPACING AND EQUALLY SPACE BOLTS.
3. PROVIDE CONTRACTION JOINTS IN BULKHEAD CAP AT 32' MAX SPACING. SUBSTITUTE AN EXPANSION JOINT AT EVERY 4TH CONTRACTION JOINT. SEE SHEET S-008 FOR JOINT DETAILS.

C1 BULKHEAD CAP PLAN LAYOUT

SCALE: ½"=1'-0"

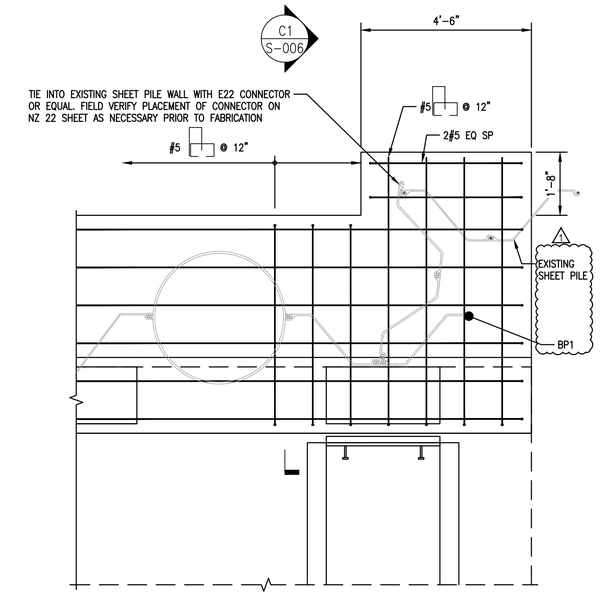

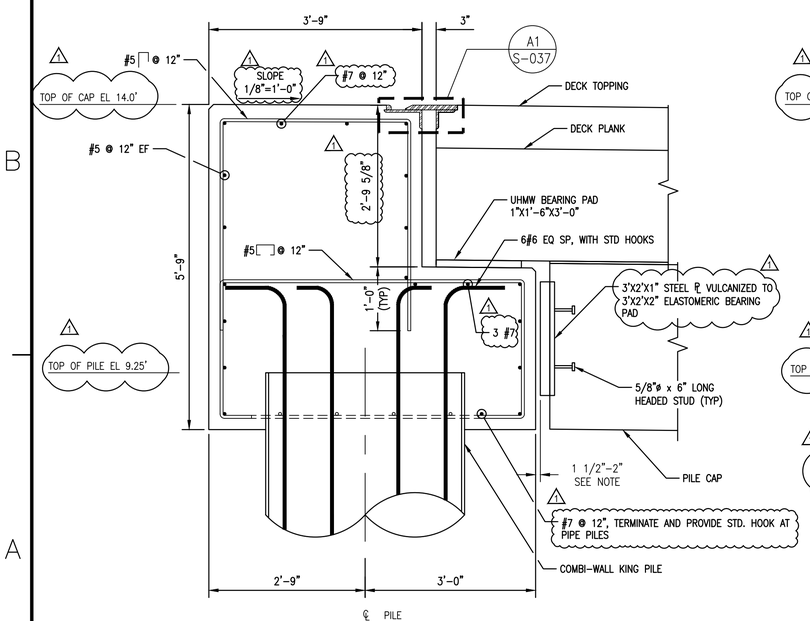

A1 TYPICAL BULKHEAD CAP AT KING PILE

SCALE: ¾"=1'-0"

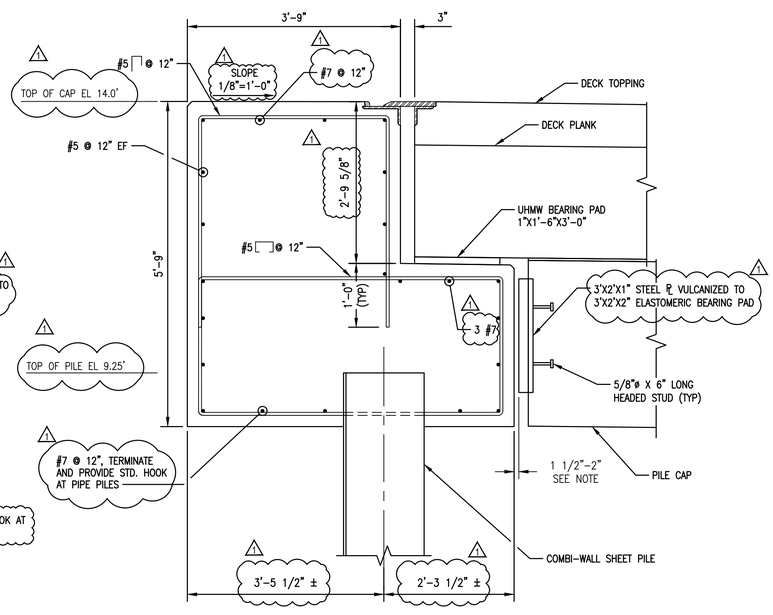

A3 TYPICAL BULKHEAD CAP AT SHEET PILE

SCALE: ¾"=1'-0"

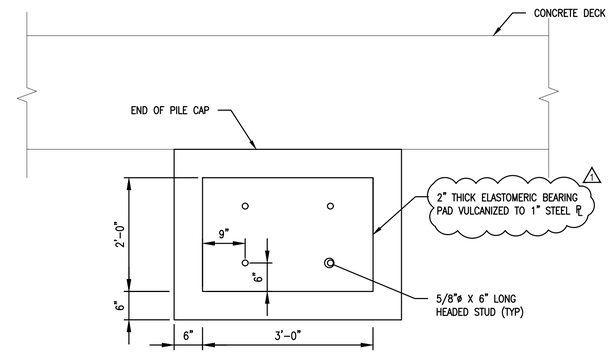

B4 PILE CAP/BULKHEAD BEARING PAD

SCALE: ¾"=1'-0"

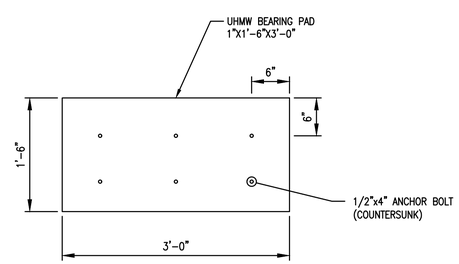

A4 UHW BEARING PAD

SCALE: 1"=1"

Berth 6 Expansion

Port of Port Arthur
P.O. Box 1428
Port Arthur, Texas 77641

COLLINS ENGINEERS INC
501 PROCTER ST., SUITE 324
PORT ARTHUR, TX 77640
409-895-2550
WWW.COLLINSENGR.COM
TX-FIRM F-9791

8/25/21

STATE OF TEXAS
MICHAEL J. SCHNEIDER
112407
LICENSED PROFESSIONAL ENGINEER

COLLINS ENGINEERS, INC. SEAL
TEXAS REGISTERED ENGINEERING FIRM F-9791

REVISIONS

NO.	DESCRIPTION	DATE
1	ADDENDUM 2	8/25/21

FOR BIDDING ONLY
NOT FOR CONSTRUCTION

Designed by:	ZDJ
Drawn by:	BRB
Checked by:	WWM
Reviewed by:	MJS
Revisions by:	

PROJECT NO. 8.334
DATE: 06/23/2021

PORT OF PORT ARTHUR

BERTH 6 EXPANSION

PORT ARTHUR TX

STRUCTURAL

BULKHEAD CAP DETAILS

DISCIPLINE/SHT NO
S-005

SHEET 50 OF 110

DRAWFORM REVISION: 31 JANUARY 2017

FILE NAME: \\crosunc-an\an\regular projects\15-10615.00 pcpa berth 6\06 - engineering\02 - drawings\working design drawings\S-005 TO S-010.dwg LAYOUT NAME: S-005 BULKHEAD CAP DETAILS PLOTTED: Wednesday, August 25, 2021 - 5:31pm USER: ghoyt

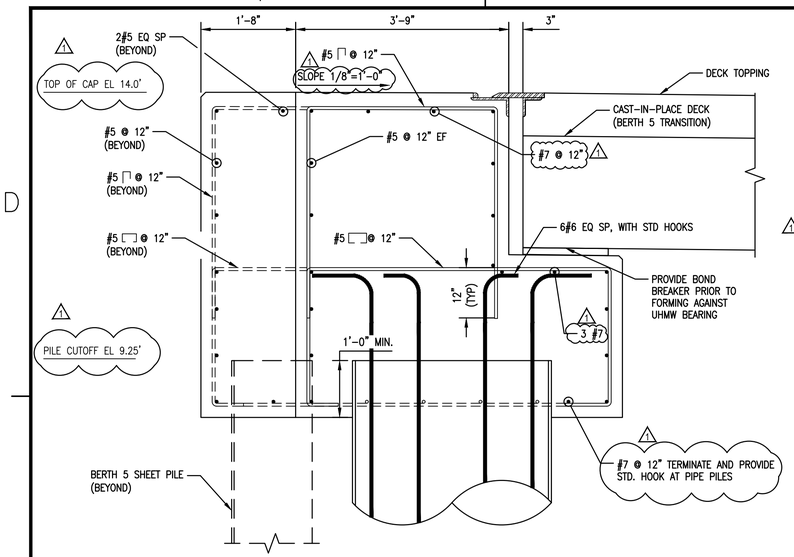

C1 BULKHEAD CAP AT BERTH 5 INTERFACE

SCALE: ½"=1'-0"

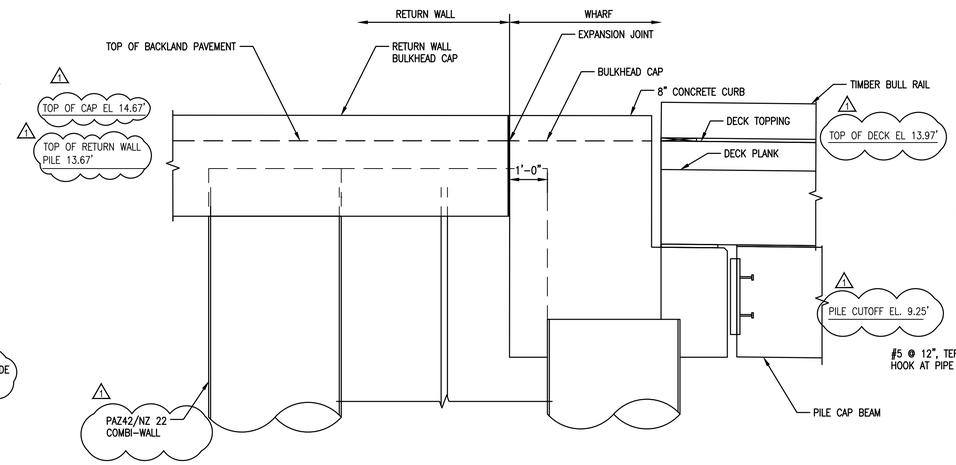

C3 BULKHEAD CAP RETURN INTERFACE

SCALE: ½"=1'-0"

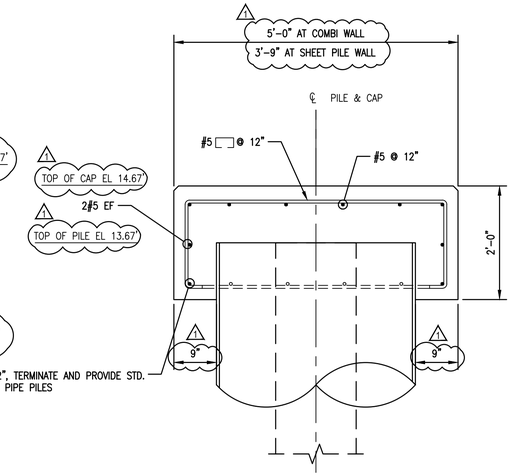

C4 TYPICAL BULKHEAD CAP AT RETURN

SCALE: ½"=1'-0"

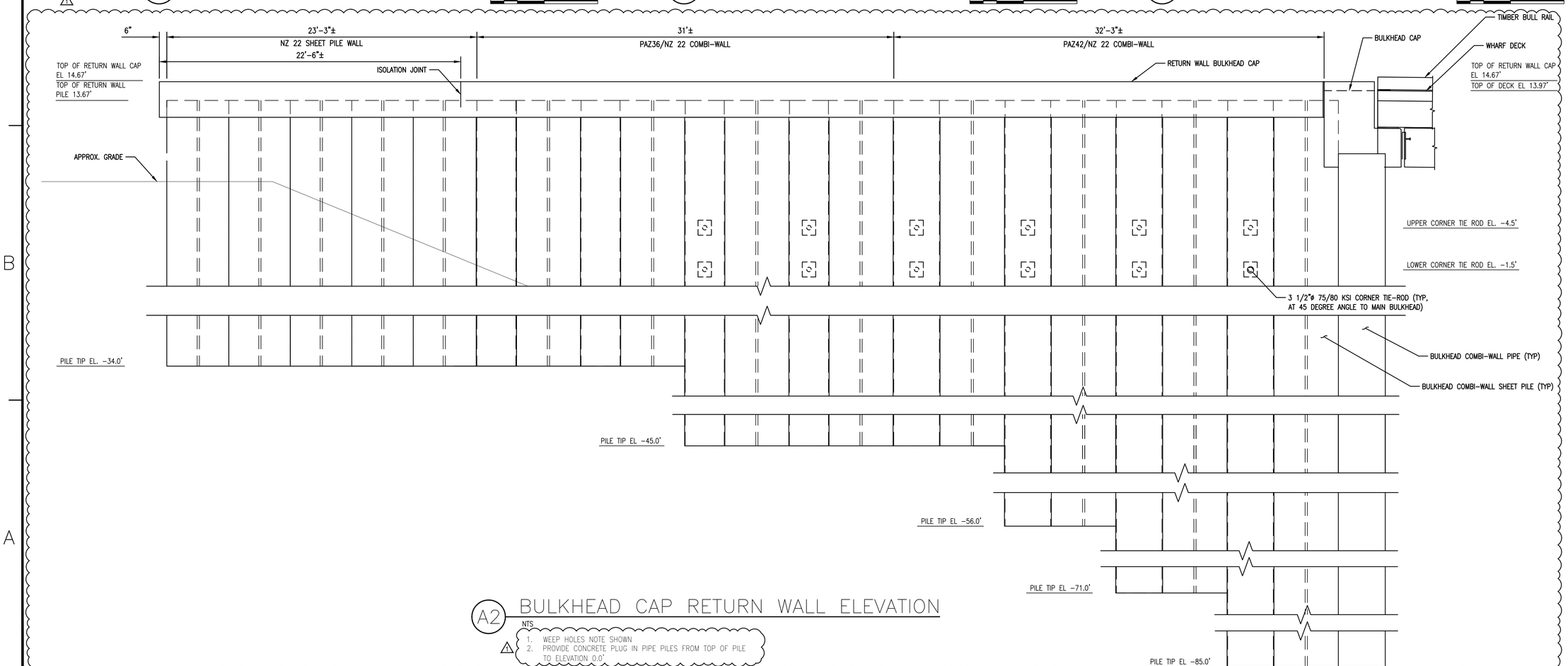

A2 BULKHEAD CAP RETURN WALL ELEVATION

NTS

1. WEEP HOLES NOTE SHOWN
2. PROVIDE CONCRETE PLUG IN PIPE PILES FROM TOP OF PILE TO ELEVATION 0.0'

Berth 6 Expansion

Port of Port Arthur
P.O. Box 1428
Port Arthur, Texas 77641

COLLINS ENGINEERS INC
501 PROCTER ST., SUITE 324
PORT ARTHUR, TX 77640
409-895-2550
WWW.COLLINSENGR.COM
TX-FIRM F-9791

8/25/21

STATE OF TEXAS
MICHAEL J. SCHNEIDER
112407
LICENSED PROFESSIONAL ENGINEER

COLLINS ENGINEERS, INC. SEAL
TEXAS REGISTERED ENGINEERING FIRM F-9791

REVISIONS

NO.	DESCRIPTION	DATE
1	ADDENDUM 2	8/25/21

FOR BIDDING ONLY
NOT FOR CONSTRUCTION

Designed by:	ZDJ
Drawn by:	BRB
Checked by:	WWM
Reviewed by:	MJS
Revisions by:	

PROJECT NO. 8.334
DATE: 06/23/2021

PORT OF PORT ARTHUR

BERTH 6 EXPANSION

PORT ARTHUR TX

STRUCTURAL

BULKHEAD WALL TERMINATION DETAILS

DISCIPLINE/SHT NO
S-006

SHEET 51 OF 110

DRAWFORM REVISION: 31 JANUARY 2017

FILE NAME: \\rosuni-nt\nt\regular projects\15-10615.00 ppa berth 6\06 - engineering\02 - drawings\working design drawings\S-005 TO S-010.dwg LAYOUT NAME: S-006 BULKHEAD WALL TERMINATION DETAILS PLOTTED: Wednesday, August 25, 2021 - 5:31pm USER: ghoyt

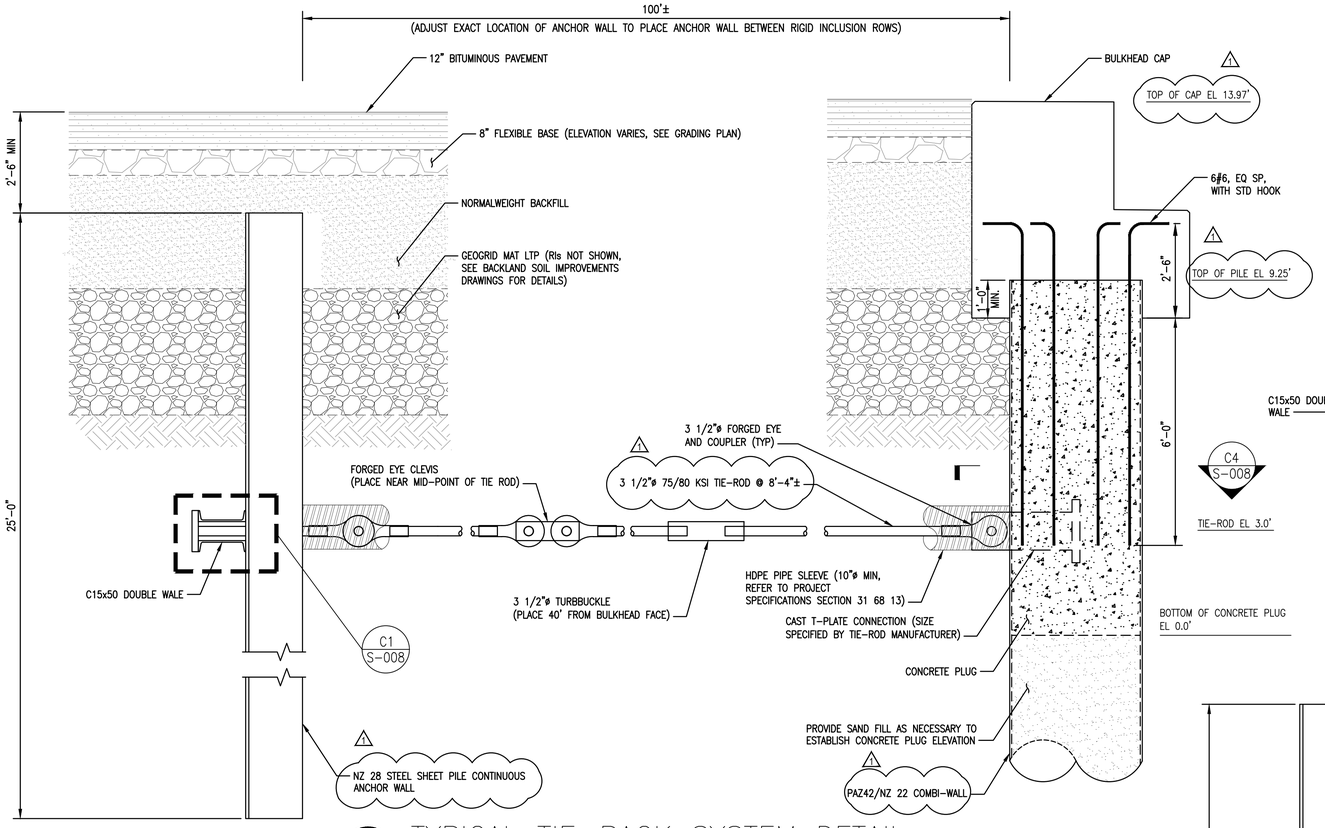

B1 TYPICAL TIE-BACK SYSTEM DETAIL
SCALE: ½"=1'-0"

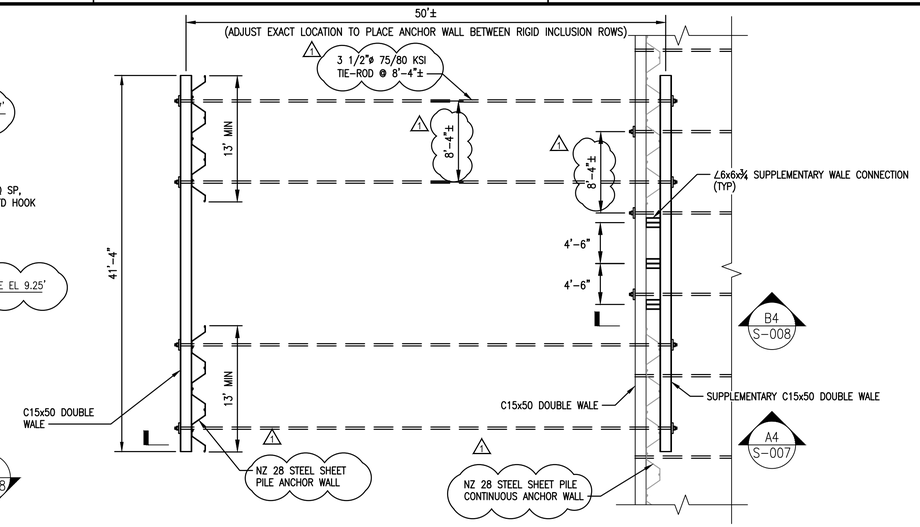

C4 SECONDARY ANCHOR WALL PLAN
SCALE: 1"=100'

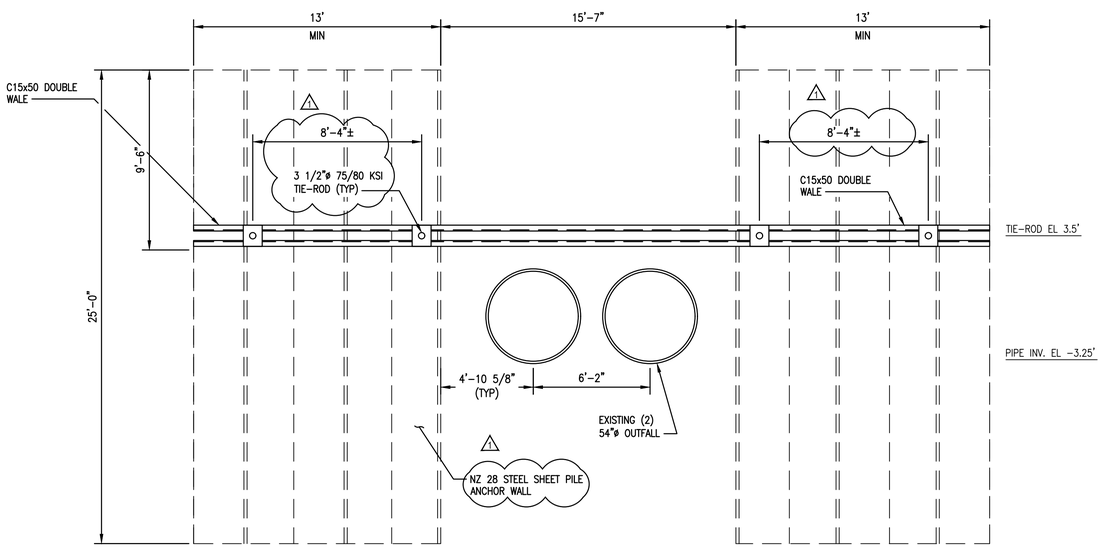

A1 SECONDARY ANCHOR WALL DETAIL
SCALE: ¼"=1'-0"

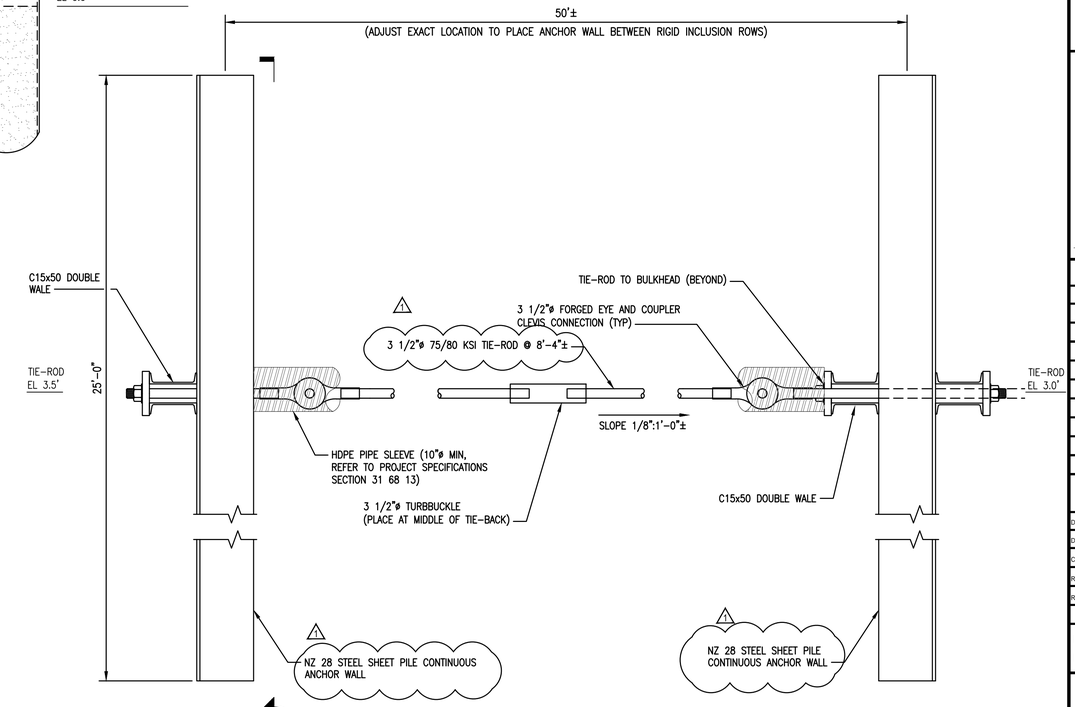

A1 S-007

A4 SECONDARY ANCHOR WALL DETAIL
SCALE: ½"=1'-0"

NOTES:

1. EYES, T-PLATES, AND TURNBUCKLES SHALL AS SPECIFIED BY THE MANUFACTURER AND SHALL DEVELOP THE FULL TENSILE CAPACITY OF THE TIE-ROD.
2. TIE-RODS CONNECTING THE BULKHEAD TO THE ANCHOR WALL SHALL BE PRETENSIONED TO A LOAD OF 140 KIPS, PRIOR TO DREDGING ACTIVITIES. REFER TO PROJECT NOTES, SPECIFICATIONS AND PHASING PLAN FOR ADDITIONAL REQUIREMENTS.
3. CONTRACTOR MAY PROPOSE AN ALTERNATIVE CONNECTION IN LIEU OF THE FORGED EYE/T-PLATES SHOWN, PROVIDED THAT THE SYSTEM MEETS THE MINIMUM DESIGN LOADS AND SERVICE LIFE, INCLUDING CORROSION LOSSES.

Berth 6 Expansion

Port of Port Arthur
P.O. Box 1428
Port Arthur, Texas 77641

COLLINS ENGINEERS INC
501 PROCTER ST., SUITE 324
PORT ARTHUR, TX 77640
409-895-2550
WWW.COLLINSENGR.COM
TX-FIRM F-9791

8/25/21
STATE OF TEXAS
MICHAEL J. SCHNEIDER
112407
LICENSED PROFESSIONAL ENGINEER
COLLINS ENGINEERS, INC. SEAL
TEXAS REGISTERED ENGINEERING FIRM F-9791

REVISIONS

NO.	DESCRIPTION	DATE
1	ADDENDUM 2	8/25/21

FOR BIDDING ONLY
NOT FOR CONSTRUCTION

Designed by:	ZDJ
Drawn by:	BRB
Checked by:	WWM
Reviewed by:	MJS
Revisions by:	

PROJECT NO. 8.334
DATE: 06/23/2021

PORT OF PORT ARTHUR
BERTH 6 EXPANSION
PORT ARTHUR TX

STRUCTURAL

BULKHEAD AND ANCHOR WALL TIE BACK DETAILS

DISCIPLINE/SHT NO
S-007

SHEET 52 OF 110

DRAWFORM REVISION: 31 JANUARY 2017

FILE NAME: \\nasuri-nh\nh\regular projects\15-10615.00 pppa berth 6\06 - engineering\02 - drawings\working design drawings\S-005 TO S-010.dwg LAYOUT NAME: S-007 BULKHEAD AND ANCHOR WALL TIE BACK DETAILS PLOTTED: Wednesday, August 25, 2021 - 5:31pm USER: ghoyt

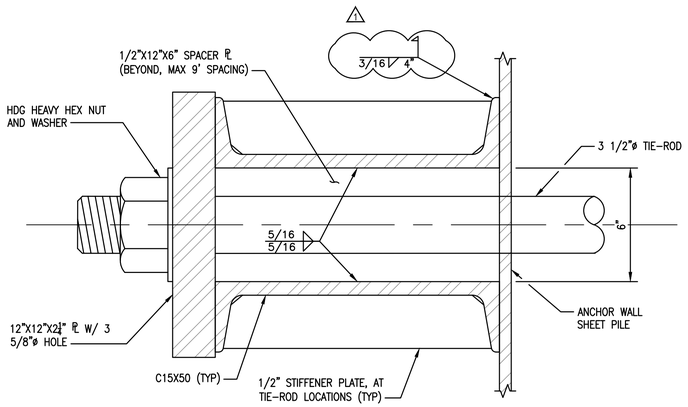

C1 ANCHOR WALL WALE CONNECTION DETAIL

SCALE: ½"=1'-0"

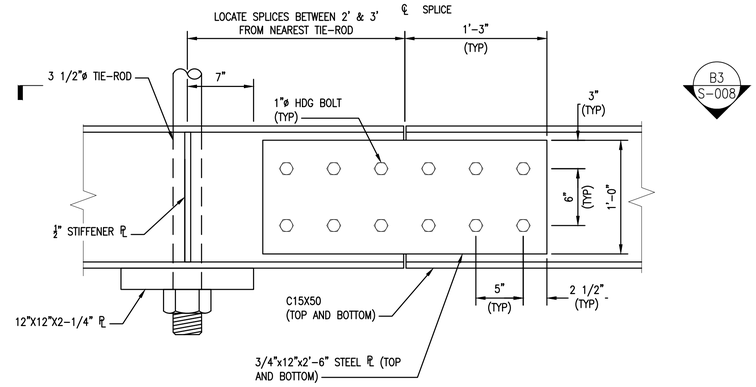

C3 ANCHOR WALL WALE SPLICE DETAIL

SCALE: ½"=1'-0"

TOP WALE SPLICE SHOWN, BOTTOM SPLICE SIMILAR. PROVIDE MINIMUM 9' SPACING BETWEEN TOP AND BOTTOM SPLICE LOCATIONS

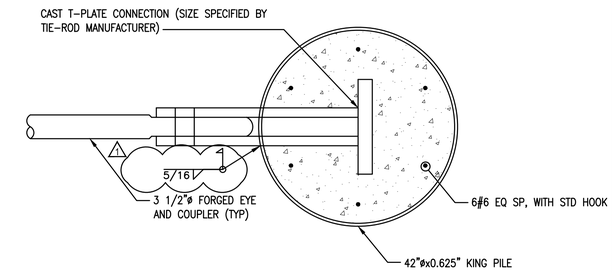

C4 KING-PILE TIE ROD CONNECTION DETAIL

SCALE: ¾"=1'-0"

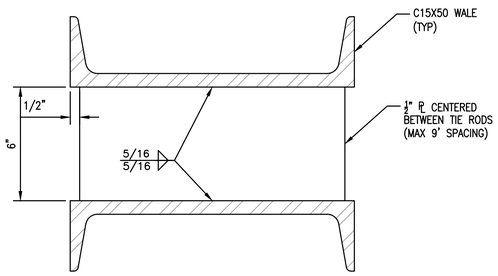

B1 C15X50 SPACER DETAIL

SCALE: 3"=1'-0"

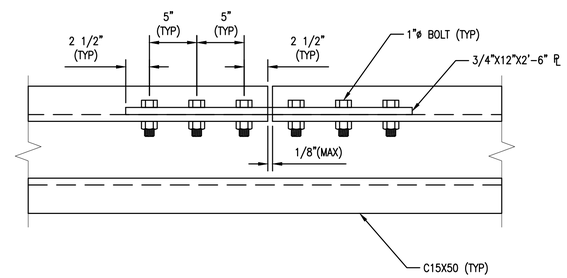

B3 C15X50 SPLICE PLATE ELEVATION

SCALE: ½"=1'-0"

TOP WALE SPLICE SHOWN, BOTTOM SPLICE SIMILAR. PROVIDE MINIMUM 9' SPACING BETWEEN TOP AND BOTTOM SPLICE LOCATIONS

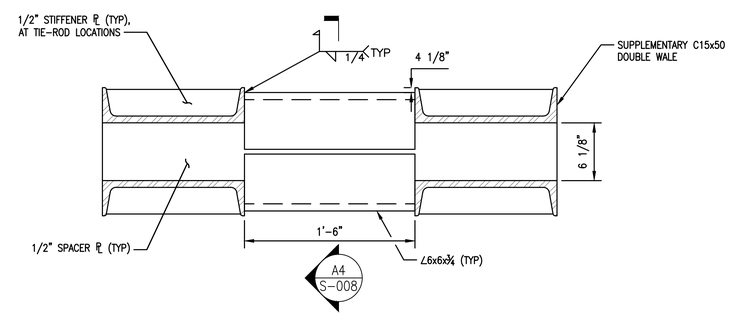

B4 SUPPLEMENTARY WALE CONNECTION DETAIL AT PIPE

SCALE: 1½"=1'-0"

TIE-RODS NOT SHOWN FOR CLARITY

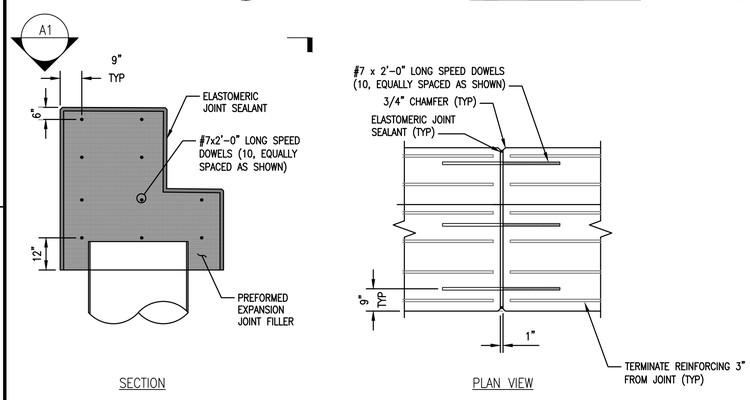

A1 BULKHEAD CAP EXPANSION JOINT DETAIL

NTS

PROVIDE EXPANSION JOINTS AT 130' MAXIMUM SPACING ALONG BULKHEAD CAP (SUBSTITUTE EVERY 4TH CONTRACTION JOINT WITH EXPANSION JOINT)

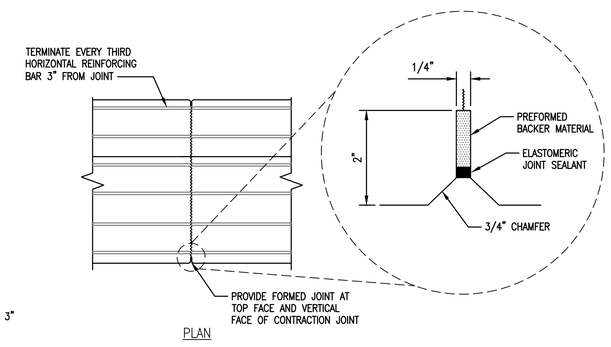

A2 BULKHEAD CAP CONTRACTION JOINT DETAIL

NTS

PROVIDE CONTRACTION JOINTS AT 32' MAX SPACING ALONG BULKHEAD CAP

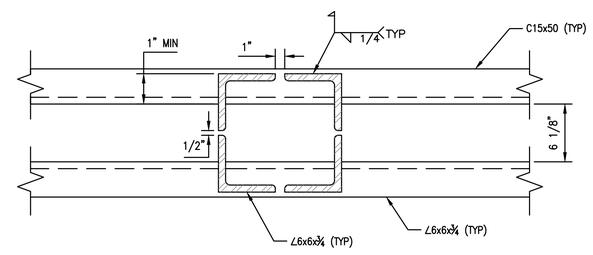

A4 SUPPLEMENTARY WALE CONNECTION DETAIL AT PIPE

SCALE: 1½"=1'-0"

NOTES:

1. FILLET WELDS SHOWN ON CHANNEL SPACER DETAIL ARE THE MINIMUM WELDS REQUIRED TO ENSURE SEAL ALL AROUND BETWEEN CHANNELS AND PLATE. ALTERNATIVE WELDS AND FABRICATION MAY BE SUBMITTED.
2. PROVIDE WELD ALONG SHEET PILE FLANGE AT OR ADJACENT TO TIE ROD, AT EACH TIE ROD CONNECTION. TYPICAL FOR UPPER AND LOWER C CHANNELS OF THE WALE.
3. PROVIDE 1/2" DIAMETER DRAIN HOLES ON TOP AND BOTTOM WALES CENTERED BETWEEN TIE ROD CONNECTIONS. OFFSET DRAINS TO CLEAR SPLICE PLATES AT SPLICE LOCATIONS.
4. SECURE ALL BOLTED CONNECTIONS WITH EITHER TWO NUTS OR UPSET THREADS AFTER TIGHTENING.

Berth 6 Expansion

Port of Port Arthur
P.O. Box 1428
Port Arthur, Texas 77641

COLLINS ENGINEERS INC
501 PROCTER ST., SUITE 324
PORT ARTHUR, TX 77640
409-895-2550
WWW.COLLINSENGR.COM
TX-FIRM F-9791

8/25/21

STATE OF TEXAS — MICHAEL J. SCHNEIDER — 112407 — LICENSED PROFESSIONAL ENGINEER

COLLINS ENGINEERS, INC. SEAL

TEXAS REGISTERED ENGINEERING FIRM F-9791

REVISIONS

NO.	DESCRIPTION	DATE
1	ADDENDUM 2	8/25/21

FOR BIDDING ONLY
NOT FOR CONSTRUCTION

Designed by:	ZDJ
Drawn by:	BRB
Checked by:	WWM
Reviewed by:	MJS
Revisions by:	

PROJECT NO. 8.334
DATE: 06/23/2021

PORT OF PORT ARTHUR

BERTH 6 EXPANSION

PORT ARTHUR TX

STRUCTURAL

BULKHEAD AND ANCHOR WALL DETAILS

DISCIPLINE/SHT NO S-008

SHEET 53 OF 110

DRAWFORM REVISION: 31 JANUARY 2017

FILE NAME: \\nasuni-ath\ath\regular projects\15-10615.00 port arthur 6\06 - engineering\02 - drawings\working design drawings\S-005 TO S-010.dwg LAYOUT NAME: S-008 BULKHEAD AND ANCHOR WALL DETAILS PLOTTED: Wednesday, August 25, 2021 - 5:31pm USER: ghoyt

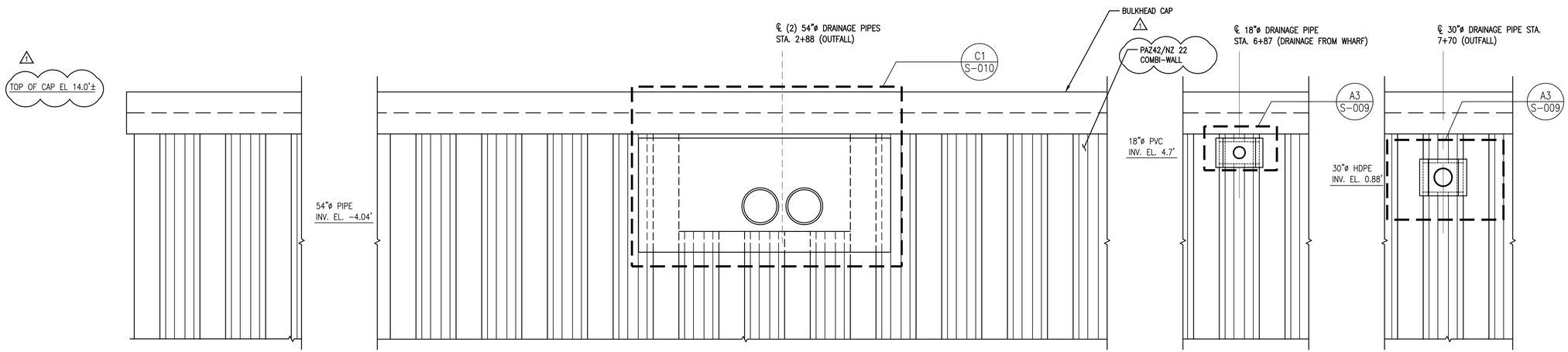

C1 BULKHEAD PENETRATIONS ELEVATION

SCALE: ⅛"=1'-0"

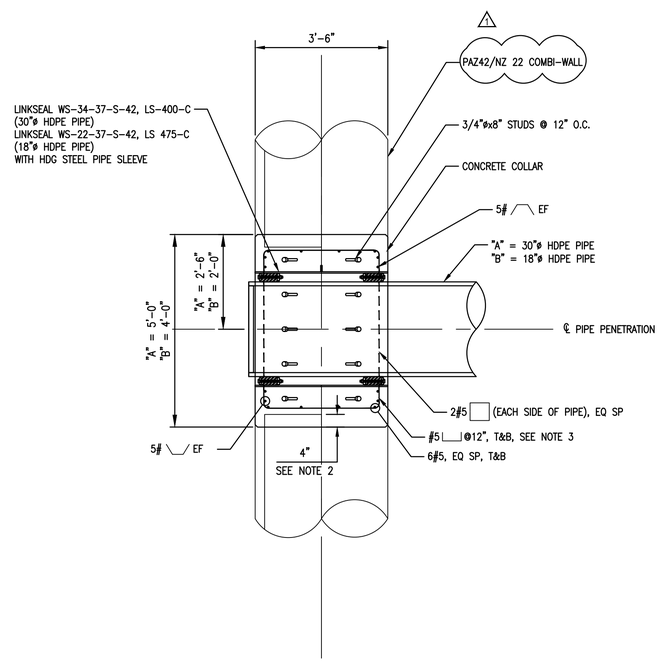

A1 30"/18" DIA. PIPE PENETRATION SECTION

SCALE: ½"=1'-0"

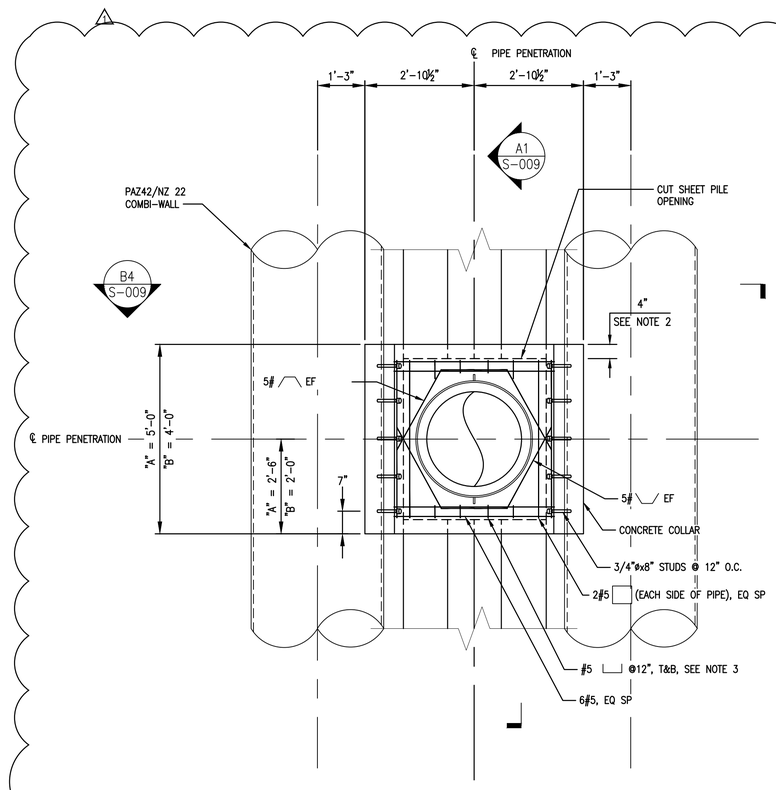

A3 30"/18" DIA. HDPE PIPE PENETRATION SECTION

SCALE: ½"=1'-0"

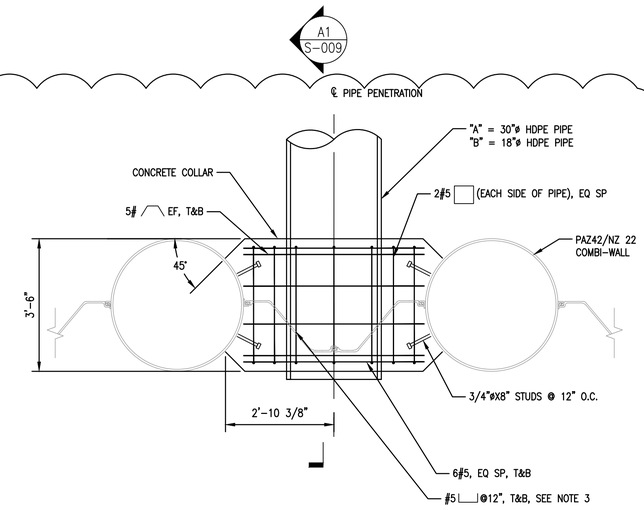

B4 30"/18" DIA. PIPE PENETRATION SECTION

SCALE: ½"=1'-0"

NOTE:
1. "A" DIMENSIONS REFERS TO 30"ø PENETRATION. "B" DIMENSIONS REFER TO 18"ø PENETRATION.
2. CUT SHEET PILE AS NECESSARY FOR PIPE PENETRATION, PROVIDING 4" EMBEDMENT OF SHEET PILE INTO CONCRETE COLLAR AT TOP AND BOTTOM, AND AT SIDES AS NECESSARY TO PROVIDE 3" COVER (6" MAX) TO STEEL SLEEVE.
3. HOOK SIZE SHALL BE THE MAX LENGTH POSSIBLE WHILE MAINTAINING 3" COVER TO PIPE SLEEVE.

Berth 6 Expansion

Port of Port Arthur
P.O. Box 1428
Port Arthur, Texas 77641

COLLINS ENGINEERS INC
501 PROCTER ST., SUITE 324
PORT ARTHUR, TX 77640
409-895-2550
WWW.COLLINSENGR.COM
TX-FIRM F-9791

8/25/21

STATE OF TEXAS
MICHAEL J. SCHNEIDER
112407
LICENSED PROFESSIONAL ENGINEER

COLLINS ENGINEERS, INC. SEAL
TEXAS REGISTERED ENGINEERING FIRM F-9791

REVISIONS

NO.	DESCRIPTION	DATE
1	ADDENDUM 2	8/25/21

FOR BIDDING ONLY
NOT FOR CONSTRUCTION

Designed by:	ZDJ
Drawn by:	BRB
Checked by:	WWM
Reviewed by:	MJS
Revisions by:	

PROJECT NO. 8.334
DATE: 06/23/2021

PORT OF PORT ARTHUR

BERTH 6 EXPANSION

PORT ARTHUR TX

STRUCTURAL

BULKHEAD PENETRATION DETAILS - 1

DISCIPLINE/SHT NO
S-009

SHEET 54 OF 110

DRAWFORM REVISION: 31 JANUARY 2017

FILE NAME: \\vosuri-nh\nh\regular projects\15-10615.00 poca berth 6\06 - engineering\02 - drawings\working design drawings\S-005 TO S-010.dwg LAYOUT NAME: S-009 BULKHEAD PENETRATION DETAILS - 1 PLOTTED: Wednesday, August 25, 2021 - 5:31pm USER: ghoyt

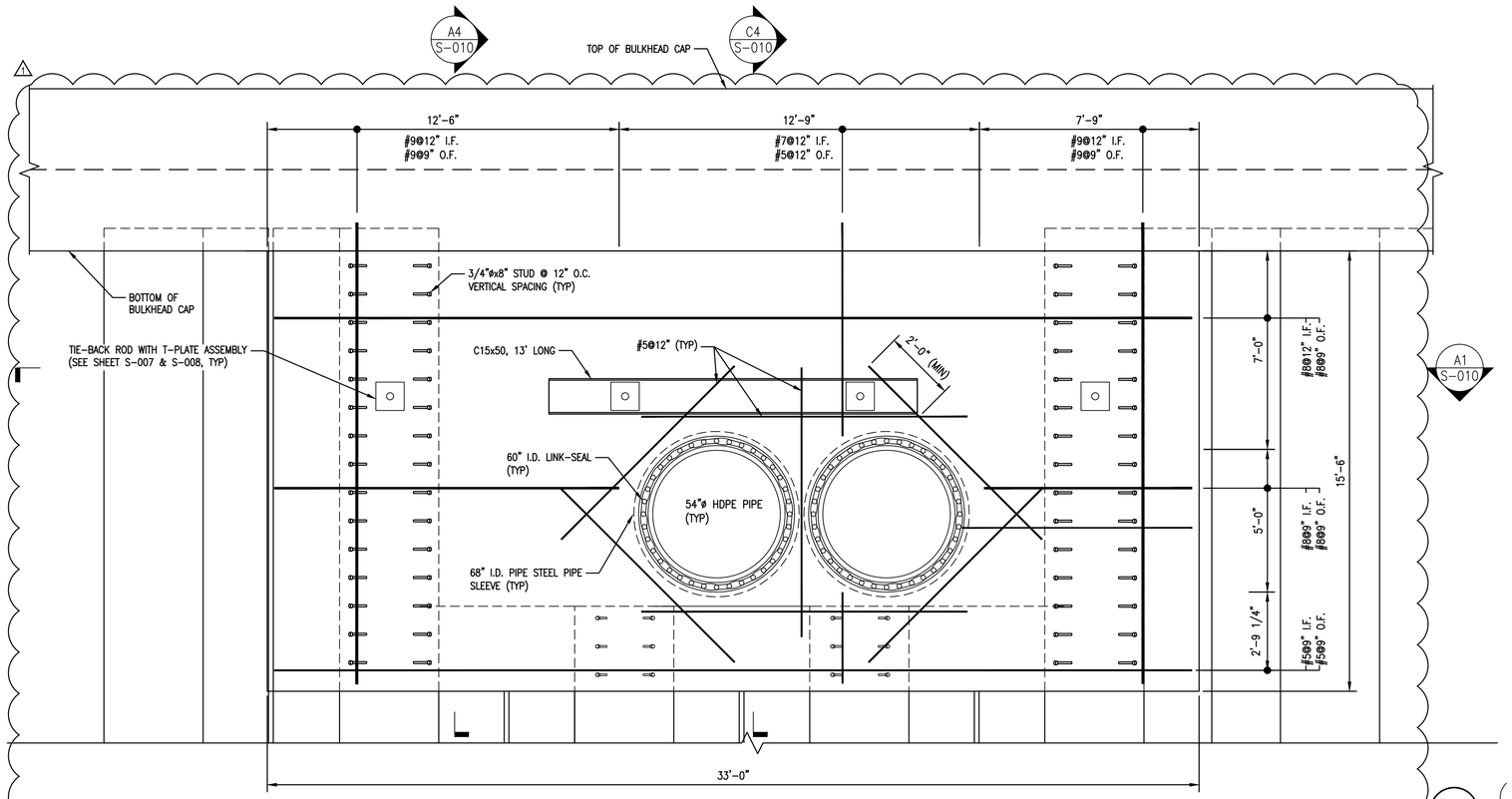

C1 (2) 54" DIA. PIPE PENETRATION ELEVATION

SCALE: 3/8"=1'-0"

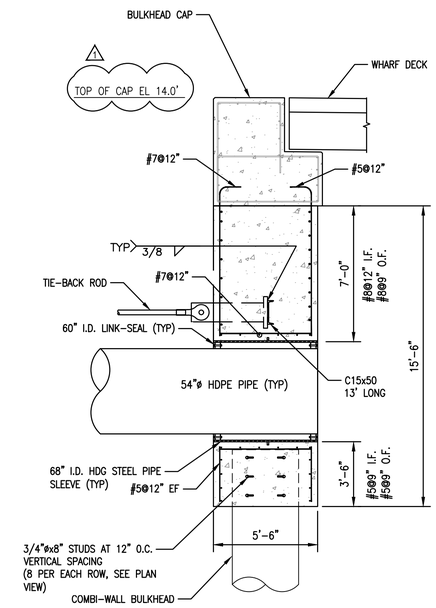

C4 (2) 54" DIA. PIPE PENETRATION SECTION

SCALE: 1/4"=1'-0"

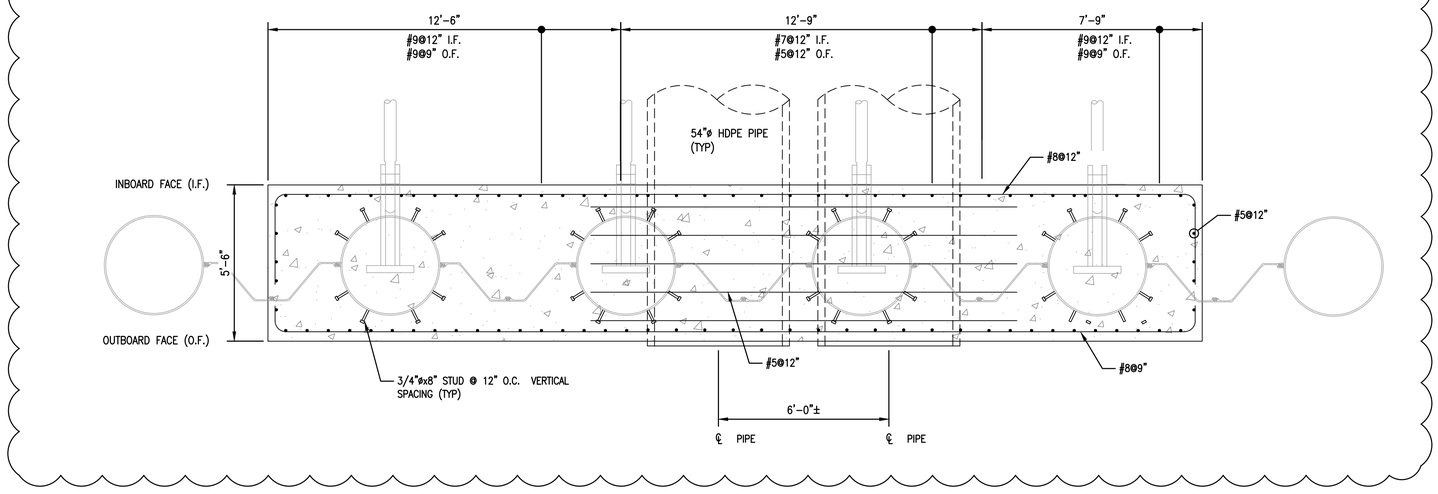

A1 (2) 54" DIA. PIPE PENETRATION ELEVATION PLAN

SCALE: 3/8"=1'-0"

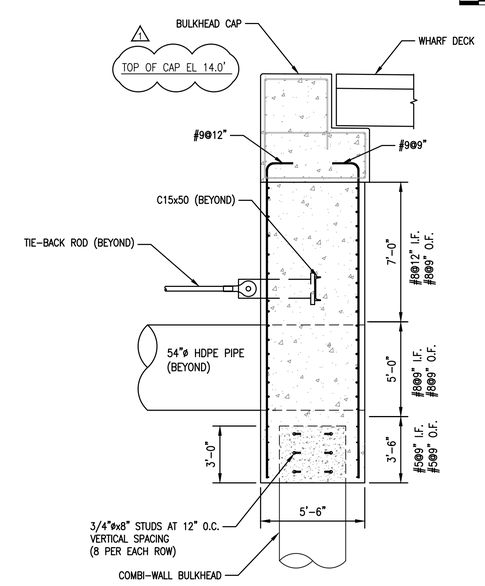

A4 (2) 54" DIA. PIPE PENETRATION SECTION

SCALE: 1/4"=1'-0"

Berth 6 Expansion

Port of Port Arthur
P.O. Box 1428
Port Arthur, Texas 77641

COLLINS ENGINEERS INC.
501 PROCTER ST., SUITE 324
PORT ARTHUR, TX 77640
409-895-2550
WWW.COLLINSENGR.COM
TX-FIRM F-9791

8/25/21

STATE OF TEXAS
MICHAEL J. SCHNEIDER
112407
LICENSED PROFESSIONAL ENGINEER

COLLINS ENGINEERS, INC. SEAL
TEXAS REGISTERED ENGINEERING FIRM F-9791

REVISIONS

NO.	DESCRIPTION	DATE
1	ADDENDUM 2	8/25/21

FOR BIDDING ONLY
NOT FOR CONSTRUCTION

Designed by:	ZDJ
Drawn by:	BRB
Checked by:	WWM
Reviewed by:	MJS
Revisions by:	

PROJECT NO. 8.334
DATE: 06/23/2021

PORT OF PORT ARTHUR

BERTH 6 EXPANSION

PORT ARTHUR TX

STRUCTURAL

BULKHEAD PENETRATION DETAILS - 2

DISCIPLINE/SHT NO
S-010

SHEET 55 OF 110

DRAWFORM REVISION: 31 JANUARY 2017

FILE NAME: \\nasuni-nh\nh\regular projects\15-10615.00 ppa berth 6\06 - engineering\02 - drawings\working design drawings\S-005 TO S-010.dwg LAYOUT NAME: S-010 BULKHEAD PENETRATION DETAILS - 2 PLOTTED: Wednesday, August 25, 2021 - 5:31pm USER: ghoyt

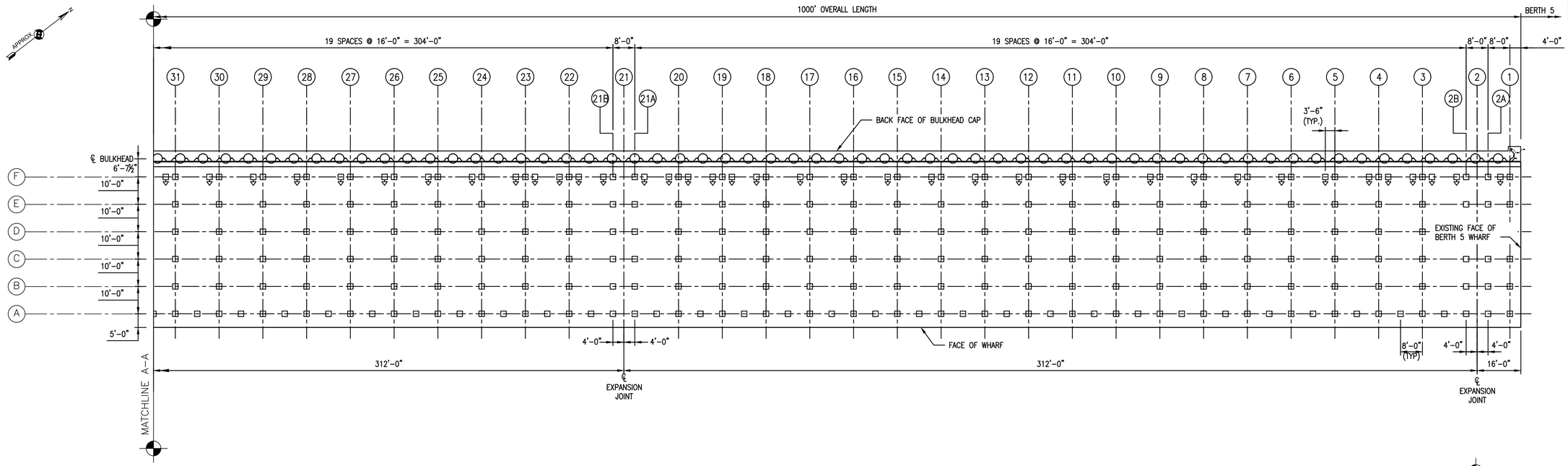

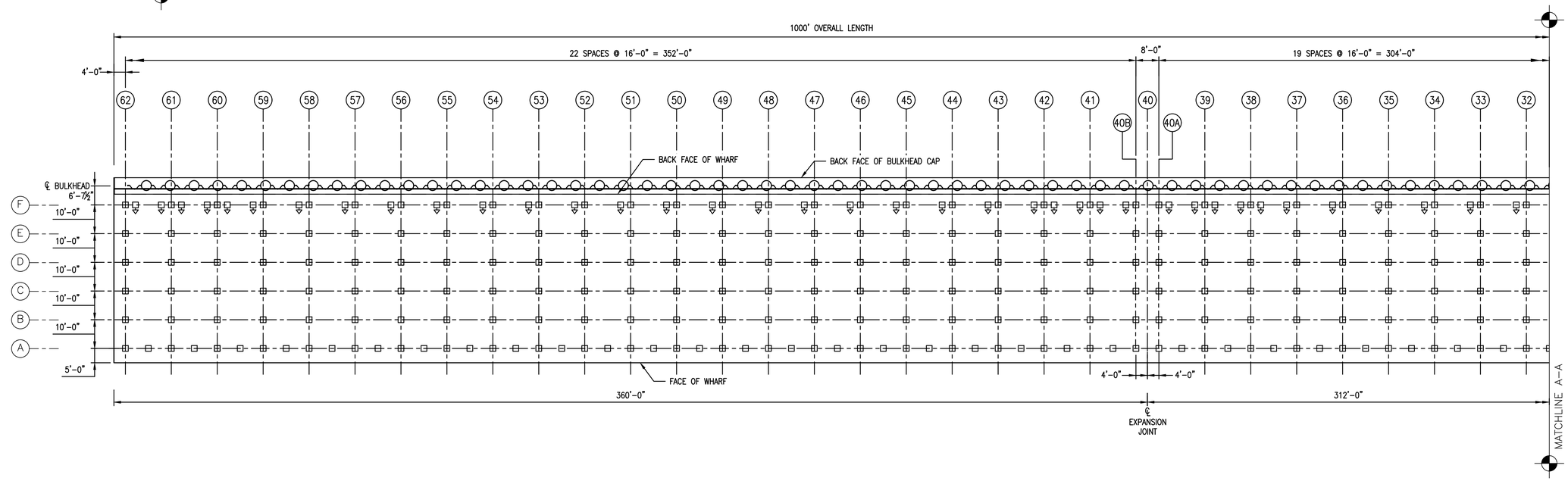

LEGEND

- PAZ42/NZ 22 BULKHEAD (1)
- 24" SQUARE PRESTRESSED CONCRETE PILE
- 24" SQUARE PRESTRESSED CONCRETE BATTER PILE
- (54) PILE BENT DESIGNATION
- (A) PILE ROW DESIGNATION

PILE PLAN

SCALE: 1"=20'

PLAN NORTH

NOTE: BULKHEAD RETURN WALL AND TIE-RODS NOT SHOWN FOR CLARITY

Berth 6 Expansion

Port of Port Arthur
P.O. Box 1428
Port Arthur, Texas 77641

COLLINS ENGINEERS INC
501 PROCTER ST., SUITE 324
PORT ARTHUR, TX 77640
409-895-2550
WWW.COLLINSENGR.COM
TX-FIRM F-9791

8/25/21

STATE OF TEXAS
MICHAEL J. SCHNEIDER
112407
LICENSED PROFESSIONAL ENGINEER

COLLINS ENGINEERS, INC. SEAL
TEXAS REGISTERED ENGINEERING FIRM F-9791

REVISIONS

NO.	DESCRIPTION	DATE
1	ADDENDUM 2	8/25/21

FOR BIDDING ONLY
NOT FOR CONSTRUCTION

Designed by:	ZDJ
Drawn by:	BRB
Checked by:	WWM
Reviewed by:	MJS
Revisions by:	

PROJECT NO. 8.334
DATE: 06/23/2021

PORT OF PORT ARTHUR

BERTH 6 EXPANSION

PORT ARTHUR TX

STRUCTURAL

WHARF PILE PLAN

DISCIPLINE/SHT NO
S-011

SHEET 56 OF 110

DRAWFORM REVISION: 31 JANUARY 2017

FILE NAME: \\vasuni-wh\wh\regular projects\15-10615.00 popa berth 6\06 - engineering\02 - drawings\working design drawings\S-011.dwg LAYOUT NAME: S-011 PILE PLAN PLOTTED: Wednesday, August 25, 2021 - 5:32pm USER: ghoyt

PILE SCHEDULE – BENT 1 TO 2A					
PILE	SIZE	PILE TIP ELEV. (FT)	PILE CUT-OFF ELEV. (FT)	WORKING LOAD DL + LL (TONS)	ESTIMATED PILE LENGTH (FT)
A AT FENDER PANEL BLOCK	24X24	–115	6.85	130	125
A	24X24	–115	9.25	130	125
B	24X24	–120	11.875	150	133
C	24X24	–115	12.00	150	128
D	24X24	–115	12.125	150	128
E	24X24	–95	12.25	155	108
F	24X24	–95	10.80	155	106
BAT F	24X24	–85	10.80	130	101

PILE SCHEDULE – BENT 2B TO 12					
PILE	SIZE	PILE TIP ELEV. (FT)	PILE CUT-OFF ELEV. (FT)	WORKING LOAD DL + LL (TONS)	ESTIMATED PILE LENGTH (FT)
A AT FENDER PANEL BLOCK	24X24	–115	6.85	130	125
A	24X24	–115	9.25	130	125
B	24X24	–120	9.375	150	130
C	24X24	–115	9.5	150	125
D	24X24	–115	9.625	150	125
E	24X24	–95	9.75	155	105
F	24X24	–95	9.80	155	105
BAT F	24X24	–85	9.80	130	100

PILE SCHEDULE – BENT 13 TO 41					
PILE	SIZE	PILE TIP ELEV. (FT)	PILE CUT-OFF ELEV. (FT)	WORKING LOAD DL + LL (TONS)	ESTIMATED PILE LENGTH (FT)
A AT FENDER PANEL BLOCK	24X24	–100	6.85	130	110
A	24X24	–100	9.25	130	110
B	24X24	–105	9.375	150	115
C	24X24	–100	9.5	150	110
D	24X24	–100	9.625	150	110
E	24X24	–90	9.75	155	100
F	24X24	–90	9.80	155	100
BAT F	24X24	–85	9.80	130	100

PILE SCHEDULE – BENT 42 TO 62					
PILE	SIZE	PILE TIP ELEV. (FT)	PILE CUT-OFF ELEV. (FT)	WORKING LOAD DL + LL (TONS)	ESTIMATED PILE LENGTH (FT)
A AT FENDER PANEL BLOCK	24X24	–85	6.85	130	95
A	24X24	–85	9.25	130	95
B	24X24	–85	9.375	150	95
C	24X24	–85	9.5	150	95
D	24X24	–85	9.625	150	95
E	24X24	–85	9.75	155	95
F	24X24	–90	9.80	155	100
BAT F	24X24	–85	9.80	130	100

NOTE: CONTRACTOR SHALL TEMPORARILY SEAL METAL FLEX TUBING TO PREVENT WATER INTRUSION UNTIL REBAR DOWELS ARE INSTALLED FULLY GROUTED IN PLACE.

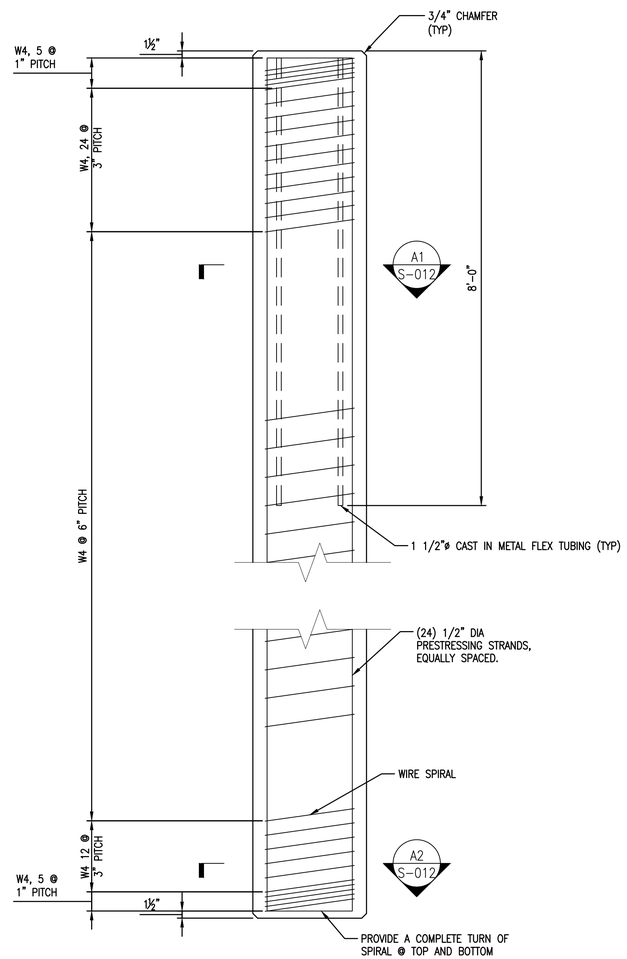

B2 24" PRESTRESSED CONCRETE PILE DETAIL
SCALE: ¾"=1'-0"

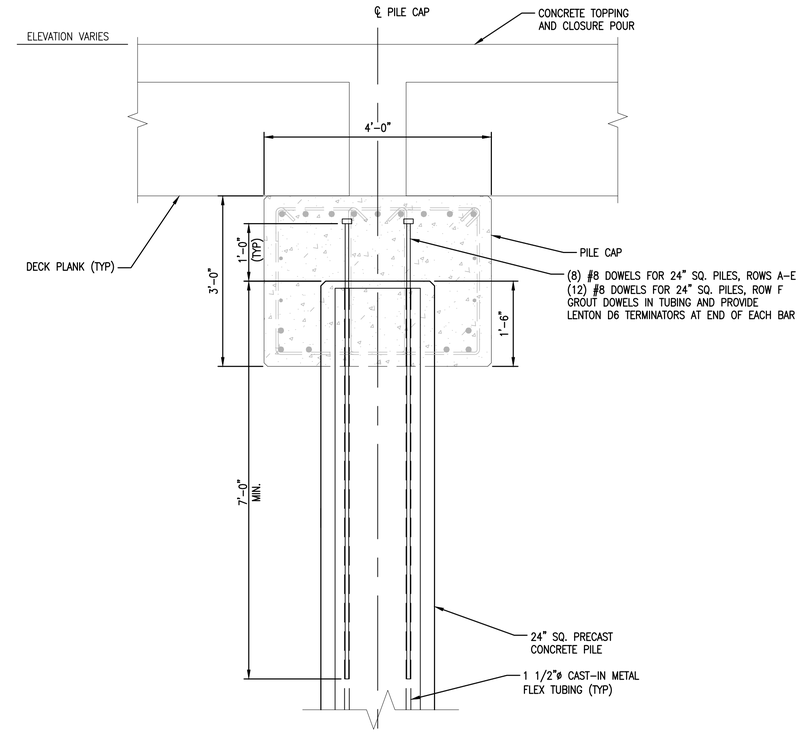

B4 24" PILE CUT-OFF DETAIL
SCALE: 1"=1'-0"

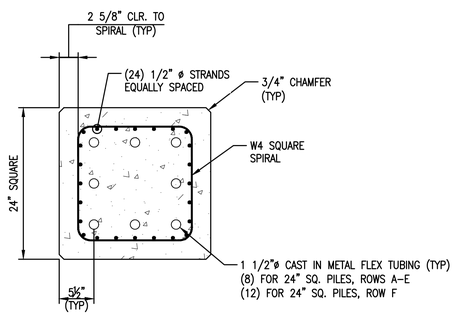

A1 24" PRESTRESSED PILE DETAIL
SCALE: 1"=1'-0"

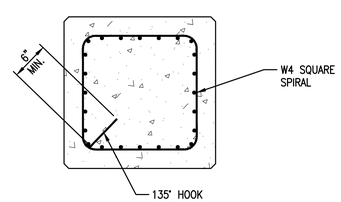

A2 SPIRALS @ ENDS OF PILE DETAIL
SCALE: 1"=1'-0"

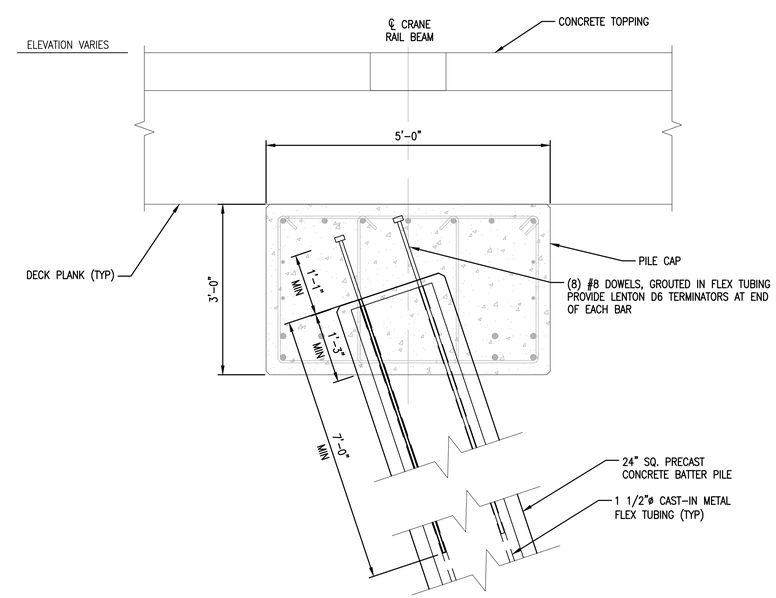

A4 24" BATTER PILE CUT-OFF DETAIL
SCALE: 1"=1'-0"

Berth 6 Expansion

Port of Port Arthur
P.O. Box 1428
Port Arthur, Texas 77641

COLLINS ENGINEERS INC
501 PROCTER ST., SUITE 324
PORT ARTHUR, TX 77640
409-895-2550
WWW.COLLINSENGR.COM
TX-FIRM F-9791

8/25/21
STATE OF TEXAS
MICHAEL J. SCHNEIDER
112407
LICENSED PROFESSIONAL ENGINEER
COLLINS ENGINEERS, INC. SEAL
TEXAS REGISTERED ENGINEERING FIRM F-9791

REVISIONS

NO.	DESCRIPTION	DATE
1	ADDENDUM 2	8/25/21

FOR BIDDING ONLY
NOT FOR CONSTRUCTION

Designed by:	ZDJ
Drawn by:	BRB
Checked by:	WWM
Reviewed by:	MJS
Revisions by:	

PROJECT NO. 8.334
DATE: 06/23/2021

PORT OF PORT ARTHUR
BERTH 6 EXPANSION
PORT ARTHUR TX

STRUCTURAL

PILE SCHEDULE AND DETAILS

DISCIPLINE/SHT NO S-012
SHEET 57 OF 110

DRAWFORM REVISION: 31 JANUARY 2017

FILE NAME: \\vosuni-wh\wh\regular projects\15-10615.00 ppa berth 6\06 – engineering\02 – drawings\working design drawings\S-012.dwg LAYOUT NAME: S-012 PILE SCHEDULE AND DETAILS PLOTTED: Wednesday, August 25, 2021 – 5:32pm USER: ghoyt

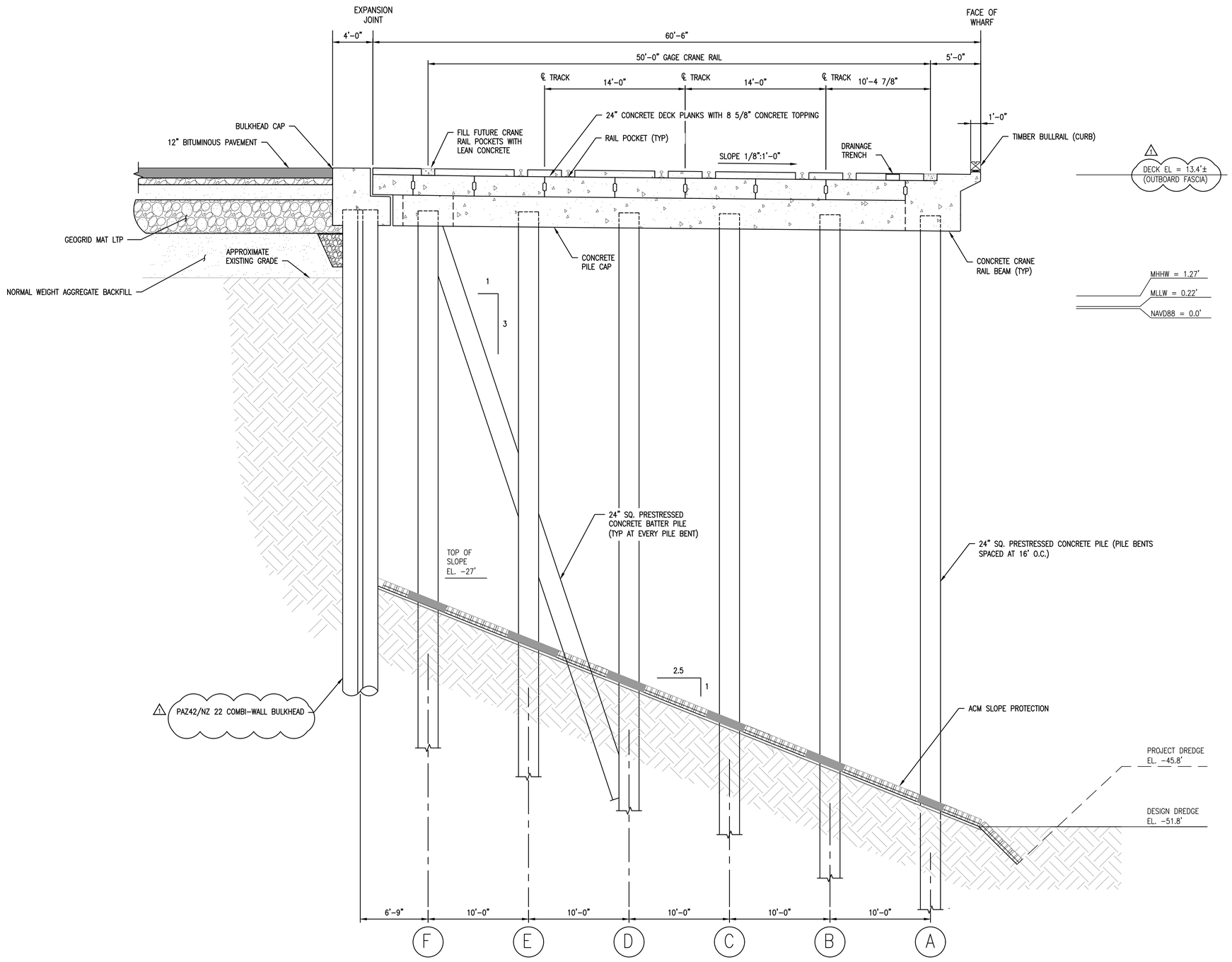

A1 WHARF TYPICAL SECTION

SCALE: 3/16"=1'-0" 0 4' 8' 12'

NOTE: RIGID INCLUSIONS IN BACKLAND AND BULKHEAD TIE-BACK SYSTEM NOT SHOWN.

Berth 6 Expansion

Port of Port Arthur
P.O. Box 1428
Port Arthur, Texas 77641

COLLINS ENGINEERS INC
501 PROCTER ST., SUITE 324
PORT ARTHUR, TX 77640
409-895-2550
WWW.COLLINSENGR.COM
TX-FIRM F-9791

8/25/21
STATE OF TEXAS
MICHAEL J. SCHNEIDER
112407
LICENSED PROFESSIONAL ENGINEER
SEAL
COLLINS ENGINEERS, INC.
TEXAS REGISTERED ENGINEERING FIRM F-9791

REVISIONS

NO.	DESCRIPTION	DATE
1	ADDENDUM 2	8/25/21

FOR BIDDING ONLY
NOT FOR CONSTRUCTION

Designed by:	ZDJ
Drawn by:	BRB
Checked by:	WWM
Reviewed by:	MJS
Revisions by:	

PROJECT NO. 8.334
DATE: 06/23/2021

PORT OF PORT ARTHUR
BERTH 6 EXPANSION
PORT ARTHUR TX

STRUCTURAL
WHARF TYPICAL SECTION

DISCIPLINE/SHT NO
S-017

DRAWFORM REVISION: 31 JANUARY 2017

FILE NAME: \\vosuci-sh\sh\regular projects\15-10615.00 ppa berth 6\06 - engineering\02 - drawings\working design drawings\S-002 S-004 S-017.dwg LAYOUT NAME: S-017 WHARF TYPICAL SECTION PLOTTED: Wednesday, August 25, 2021 - 5:32pm USER: ghoyt

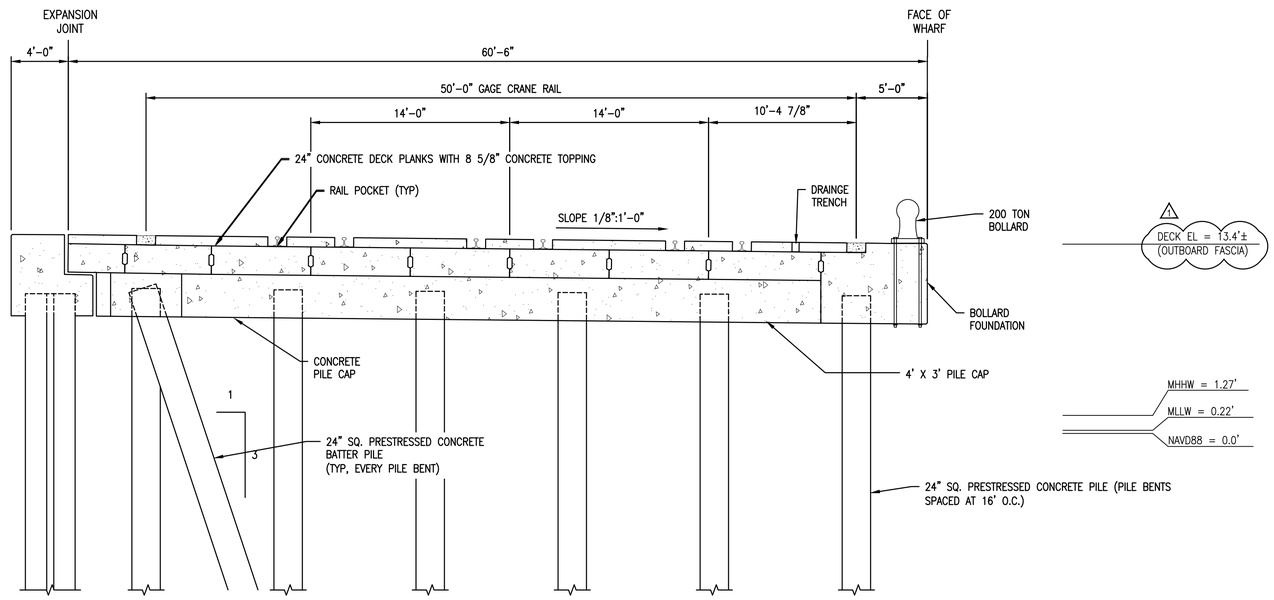

C3 TYPICAL WHARF SECTION AT BOLLARD

SCALE: 3/16"=1'-0"

0 4' 8' 12'

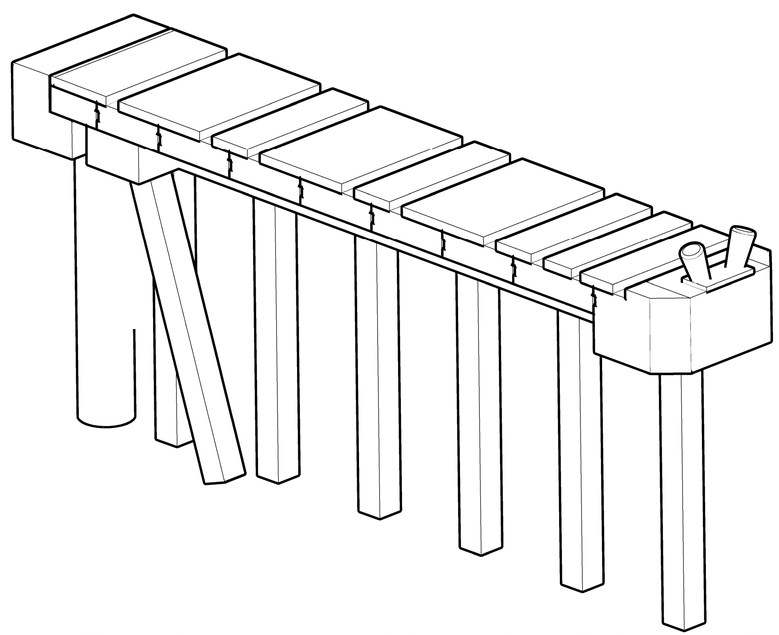

A3 TYPICAL WHARF ISOMETRIC SECTION AT BOLLARD

SCALE: 3/16"=1'-0"

0 4' 8' 12'

Berth 6 Expansion

Port of Port Arthur
P.O. Box 1428
Port Arthur, Texas 77641

COLLINS ENGINEERS INC.
501 PROCTER ST., SUITE 324
PORT ARTHUR, TX 77640
409-895-2550
WWW.COLLINSENGR.COM
TX-FIRM F-9791

8/25/21

STATE OF TEXAS
MICHAEL J. SCHNEIDER
112407
LICENSED PROFESSIONAL ENGINEER

COLLINS ENGINEERS, INC. SEAL
TEXAS REGISTERED ENGINEERING FIRM F-9791

REVISIONS

NO.	DESCRIPTION	DATE
1	ADDENDUM 2	8/25/21

FOR BIDDING ONLY
NOT FOR CONSTRUCTION

Designed by:	ZDJ
Drawn by:	BRB
Checked by:	WWM
Reviewed by:	MJS
Revisions by:	

PROJECT NO. 8.334
DATE: 06/23/2021

PORT OF PORT ARTHUR

BERTH 6 EXPANSION

PORT ARTHUR TX

STRUCTURAL

WHARF SECTION AT BOLLARD

DISCIPLINE/SHT NO
S-018

SHEET 63 OF 110

DRAWFORM REVISION: 31 JANUARY 2017

FILE NAME: \\crosunl-nth\regular projects\15-10615.00 popa berth 6\06 - engineering\02 - drawings\working design drawings\S-018 TO S-019.dwg LAYOUT NAME: S-018 WHARF SECTION AT BOLLARD PLOTTED: Wednesday, August 25, 2021 - 5:32pm USER: ghoyt

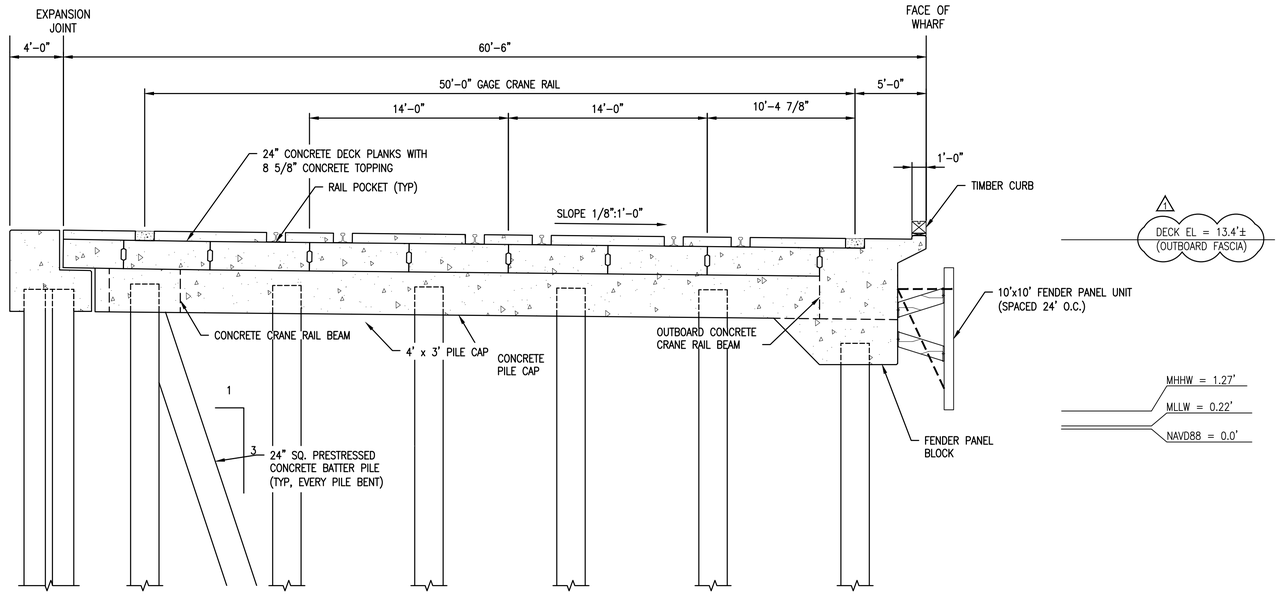

C3 WHARF SECTION AT FENDER PANEL

SCALE: 3/16"=1'-0"

0 4' 8' 12'

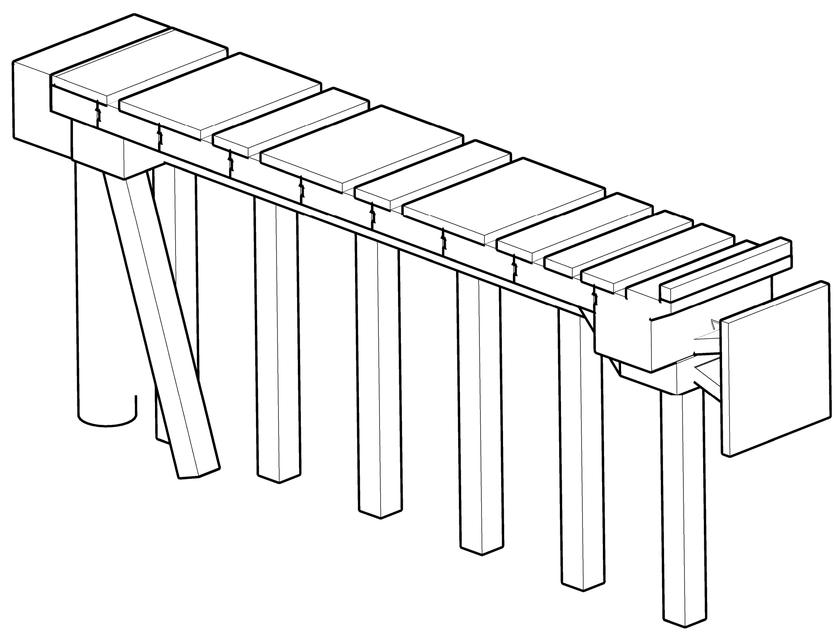

A3 TYPICAL WHARF ISOMETRIC SECTION AT FENDERS

SCALE: 3/16"=1'-0"

0 4' 8' 12'

Berth 6 Expansion

Port of Port Arthur
P.O. Box 1428
Port Arthur, Texas 77641

COLLINS ENGINEERS INC
501 PROCTER ST., SUITE 324
PORT ARTHUR, TX 77640
409-895-2550
WWW.COLLINSENGR.COM
TX-FIRM F-9791

8/25/21

STATE OF TEXAS
MICHAEL J. SCHNEIDER
112407
LICENSED PROFESSIONAL ENGINEER

COLLINS ENGINEERS, INC. SEAL
TEXAS REGISTERED ENGINEERING FIRM F-9791

REVISIONS

NO.	DESCRIPTION	DATE
1	ADDENDUM 2	8/25/21

FOR BIDDING ONLY
NOT FOR CONSTRUCTION

Designed by:	ZDJ
Drawn by:	BRB
Checked by:	WWM
Reviewed by:	MJS
Revisions by:	

PROJECT NO. 8.334
DATE: 06/23/2021

PORT OF PORT ARTHUR

BERTH 6 EXPANSION

PORT ARTHUR TX

STRUCTURAL

WHARF SECTION AT FENDER PANEL

DISCIPLINE/SHT NO
S-019

SHEET 64 OF 110

DRAWFORM REVISION: 31 JANUARY 2017

FILE NAME: \\crosunl-nth\regular projects\15-10615.00 popa berth 6\06 - engineering\02 - drawings\working design drawings\S-018 TO S-019.dwg LAYOUT NAME: S-019 WHARF SECTION AT FENDER PANEL PLOTTED: Wednesday, August 25, 2021 - 5:32pm USER: ghoyt

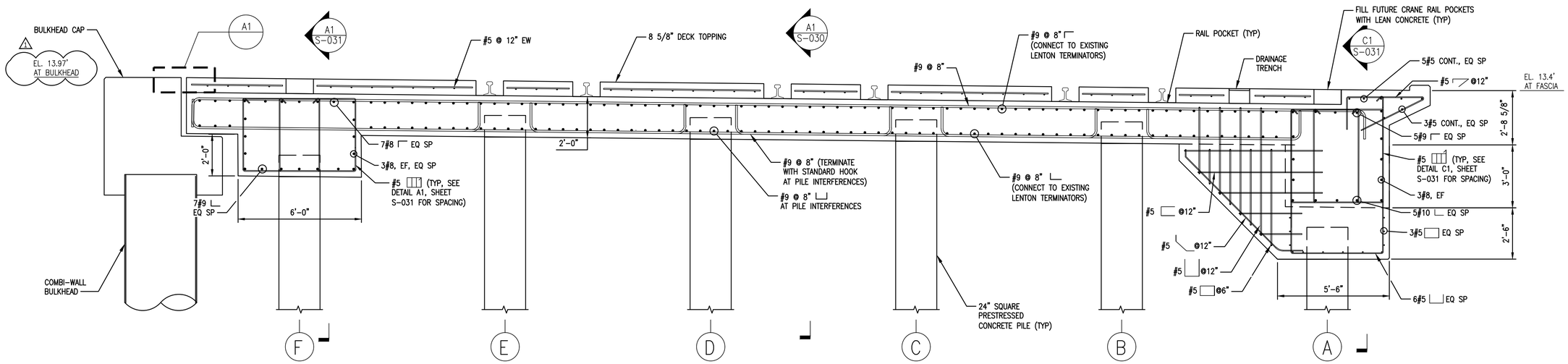

D1 SECTION AT BERTH 5 TRANSITION – BENT 1

SCALE: 3/8"=1'-0"

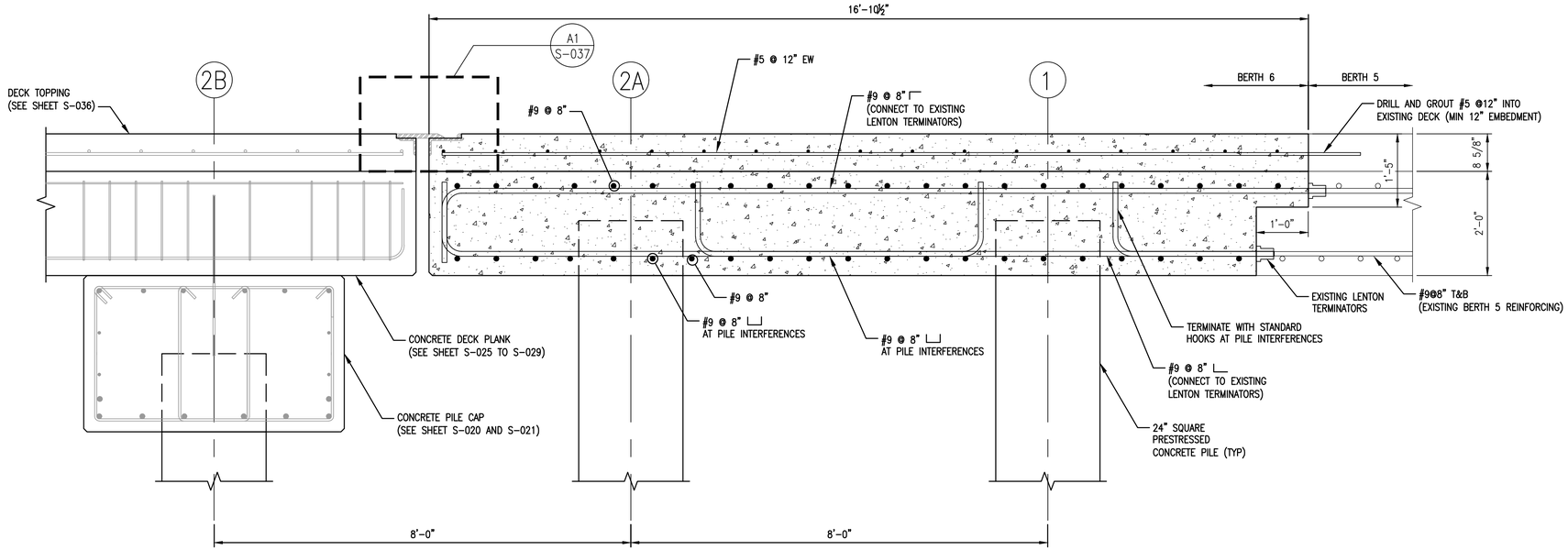

A1 SECTION AT BERTH 5 TRANSITION – PILE ROW B–E

SCALE: 3/4"=1'-0"

Berth 6 Expansion

Port of Port Arthur
P.O. Box 1428
Port Arthur, Texas 77641

COLLINS ENGINEERS INC.
501 PROCTER ST., SUITE 324
PORT ARTHUR, TX 77640
409-895-2550
WWW.COLLINSENGR.COM
TX-FIRM F-9791

8/25/21
STATE OF TEXAS
MICHAEL J. SCHNEIDER
112407
LICENSED PROFESSIONAL ENGINEER

COLLINS ENGINEERS, INC. SEAL
TEXAS REGISTERED ENGINEERING FIRM F-9791

REVISIONS

NO.	DESCRIPTION	DATE
1	ADDENDUM 2	8/25/21

FOR BIDDING ONLY
NOT FOR CONSTRUCTION

Designed by:	ZDJ
Drawn by:	BRB
Checked by:	WWM
Reviewed by:	MJS
Revisions by:	

PROJECT NO. 8.334
DATE: 06/23/2021

PORT OF PORT ARTHUR

BERTH 6 EXPANSION

PORT ARTHUR TX

STRUCTURAL

BERTH 5 INTERFACE DETAILS - 1

DISCIPLINE/SHT NO: S-030

SHEET 75 OF 110

DRAWFORM REVISION: 31 JANUARY 2017

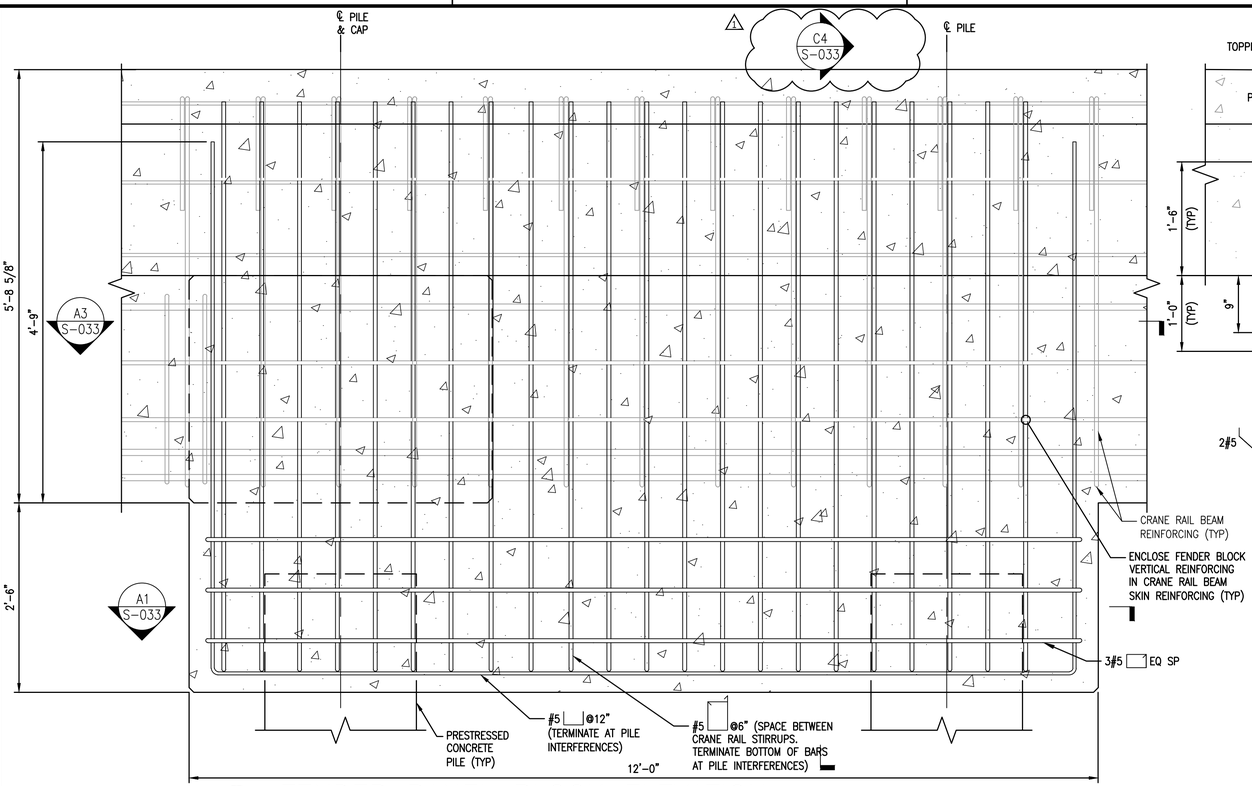

C1 FENDER PANEL BLOCK ELEVATION
SCALE: 1"=1'-0"

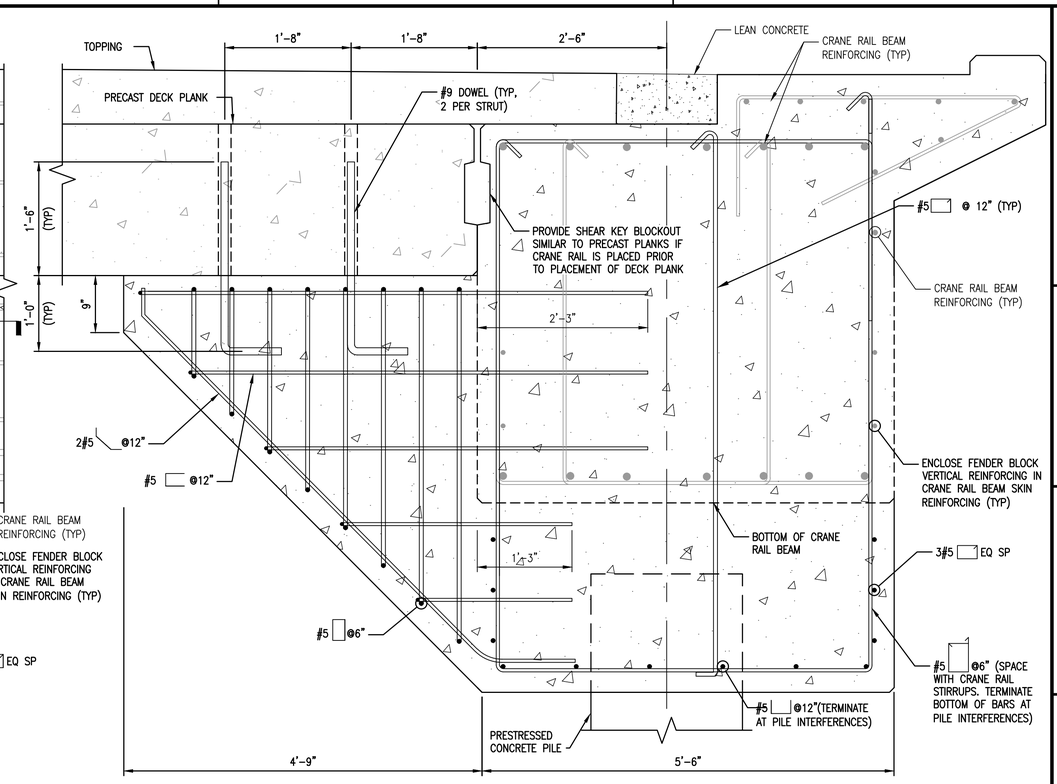

C4 FENDER PANEL BLOCK SECTION
SCALE: 1"=1'-0"

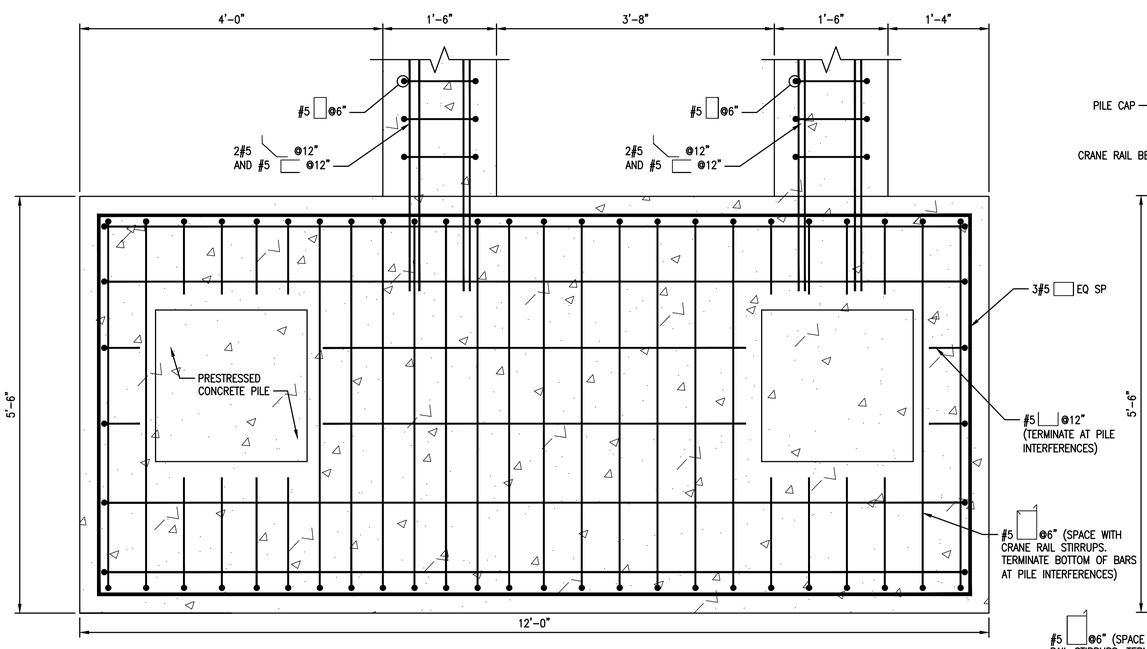

A1 FENDER PANEL BLOCK REINFORCING PLAN – BOTTOM
SCALE: 1"=1'-0"

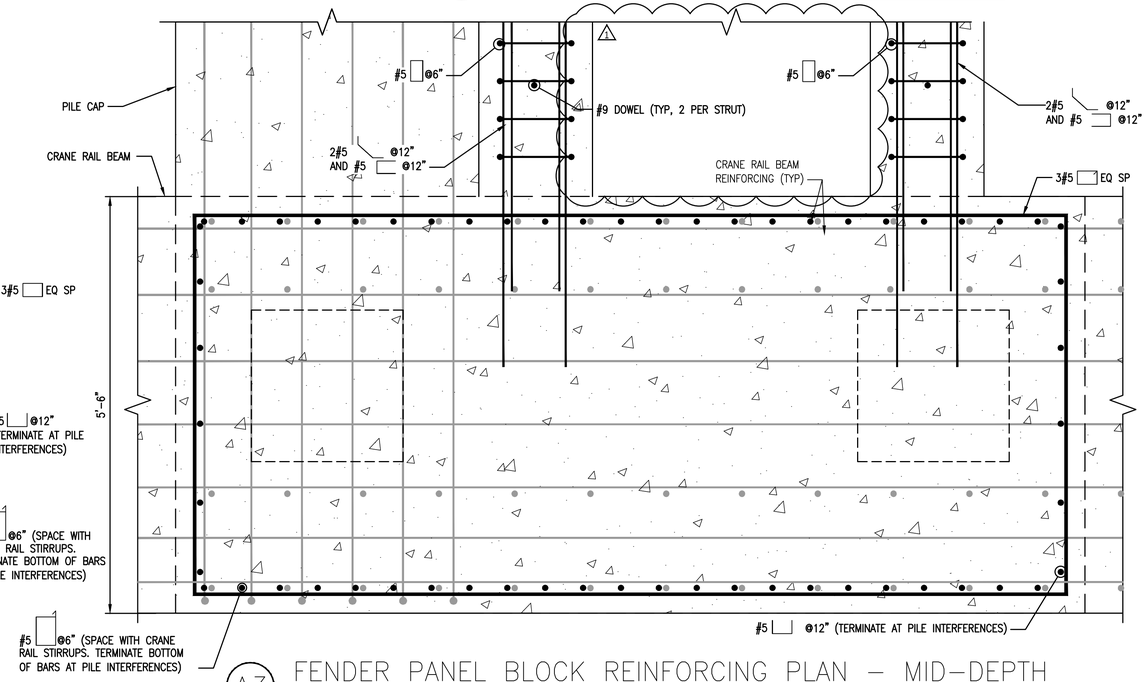

A3 FENDER PANEL BLOCK REINFORCING PLAN – MID-DEPTH
SCALE: 1"=1'-0"

Berth 6 Expansion

Port of Port Arthur
P.O. Box 1428
Port Arthur, Texas 77641

COLLINS ENGINEERS INC.
501 PROCTER ST., SUITE 324
PORT ARTHUR, TX 77640
409-895-2550
WWW.COLLINSENGR.COM
TX-FIRM F-9791

8/25/21
STATE OF TEXAS
MICHAEL J. SCHNEIDER
112407
LICENSED PROFESSIONAL ENGINEER
COLLINS ENGINEERS, INC. SEAL
TEXAS REGISTERED ENGINEERING FIRM F-9791

REVISIONS

NO.	DESCRIPTION	DATE
1	ADDENDUM 2	8/25/21

FOR BIDDING ONLY
NOT FOR CONSTRUCTION

Designed by:	ZDJ
Drawn by:	BRB
Checked by:	WWM
Reviewed by:	MJS
Revisions by:	

PROJECT NO. 8.334
DATE: 06/23/2021

PORT OF PORT ARTHUR
BERTH 6 EXPANSION
PORT ARTHUR TX

STRUCTURAL
WHARF FENDER PANEL BLOCK DETAILS - 2

DISCIPLINE/SHT NO S-033
SHEET 78 OF 110

DRAWFORM REVISION: 31 JANUARY 2017

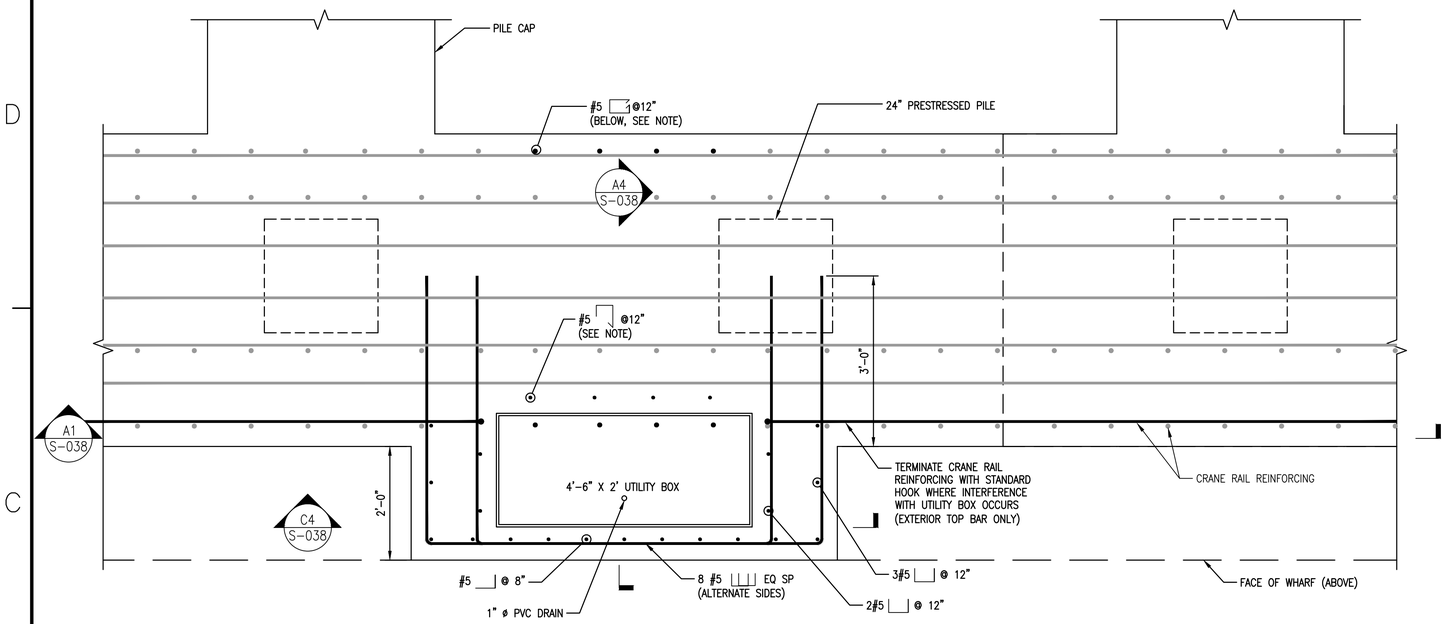

C1 POTABLE WATER BOX DETAIL – PLAN AT EL. 10.7'

SCALE: ¾"=1'-0"

NOTE: REPLACE STANDARD CRANE RAIL AND DECK STIRRUPS WITH THE CONFIGURATION SHOWN AT POTABLE WATER BOX LOCATIONS TO AVOID INTERFERENCES AND MAINTAIN MINIMUM REINFORCING STEEL COVER.

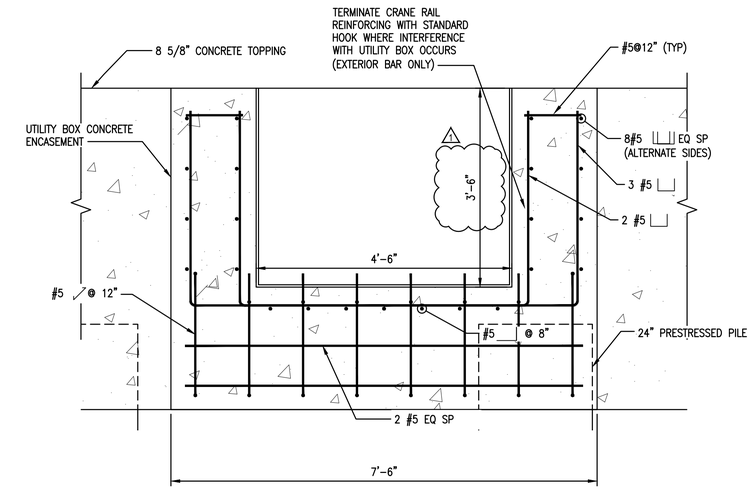

C4 POTABLE WATER BOX DETAIL – ELEVATION

SCALE: ¾"=1'-0"

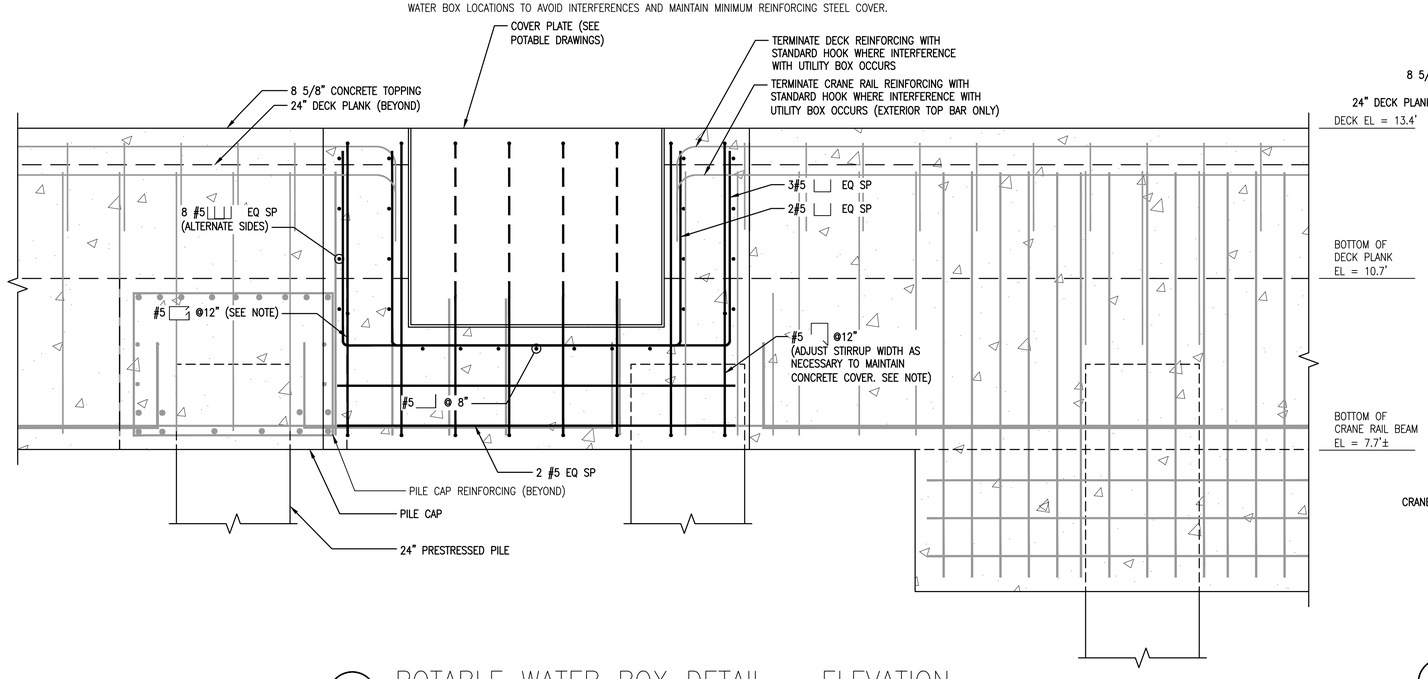

A1 POTABLE WATER BOX DETAIL – ELEVATION

SCALE: ¾"=1'-0"

NOTE: REPLACE STANDARD CRANE RAIL AND DECK STIRRUPS WITH THE CONFIGURATION SHOWN AT POTABLE WATER BOX LOCATIONS TO AVOID INTERFERENCES AND MAINTAIN MINIMUM REINFORCING STEEL COVER.

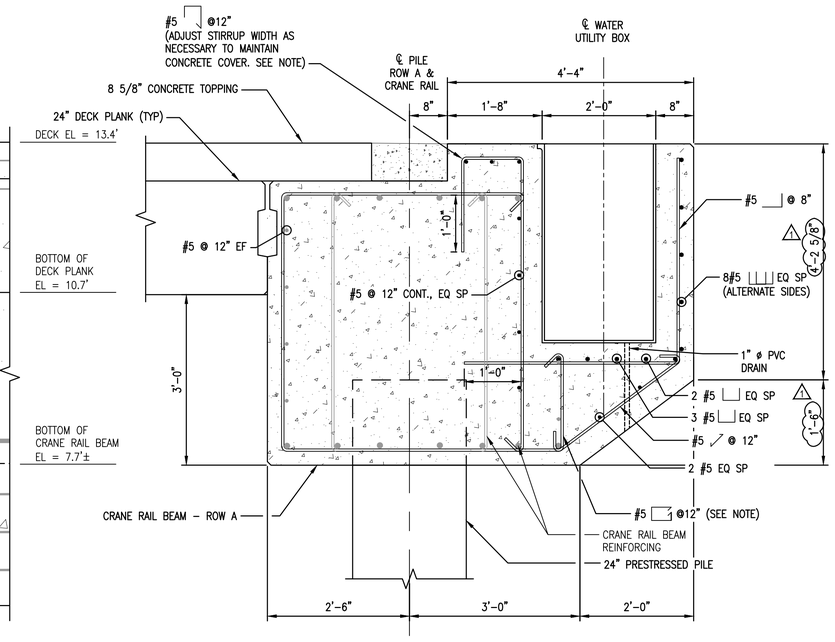

A4 POTABLE WATER BOX DETAIL – SECTION

SCALE: ¾"=1'-0"

NOTE: REPLACE STANDARD CRANE RAIL AND DECK STIRRUPS WITH THE CONFIGURATION SHOWN AT POTABLE WATER BOX LOCATIONS TO AVOID INTERFERENCES AND MAINTAIN MINIMUM REINFORCING STEEL COVER.

Berth 6 Expansion

Port of Port Arthur
P.O. Box 1428
Port Arthur, Texas 77641

COLLINS ENGINEERS INC
501 PROCTER ST., SUITE 324
PORT ARTHUR, TX 77640
409-895-2550
WWW.COLLINSENGR.COM
TX-FIRM F-9791

8/25/21

STATE OF TEXAS – MICHAEL J. SCHNEIDER – 112407 – LICENSED PROFESSIONAL ENGINEER

COLLINS ENGINEERS, INC. SEAL
TEXAS REGISTERED ENGINEERING FIRM F-9791

REVISIONS

NO.	DESCRIPTION	DATE
1	ADDENDUM 2	8/25/21

FOR BIDDING ONLY
NOT FOR CONSTRUCTION

Designed by: ZDJ
Drawn by: BRB
Checked by: WWM
Reviewed by: MJS
Revisions by:

PROJECT NO. 8.334
DATE: 06/23/2021

PORT OF PORT ARTHUR

BERTH 6 EXPANSION

PORT ARTHUR TX

STRUCTURAL

POTABLE WATER VAULT PLAN, SECTION AND DETAILS

DISCIPLINE/SHT NO S-038

SHEET 83 OF 110

DRAWFORM REVISION: 31 JANUARY 2017

FILE NAME: \\crosunix-nt\nt\regular projects\15-10615.00 ppa berth 6\06 - engineering\02 - drawings\working design drawings\S-038.dwg LAYOUT NAME: S-038 PLOTTED: Wednesday, August 25, 2021 - 5:32pm USER: ghoyt

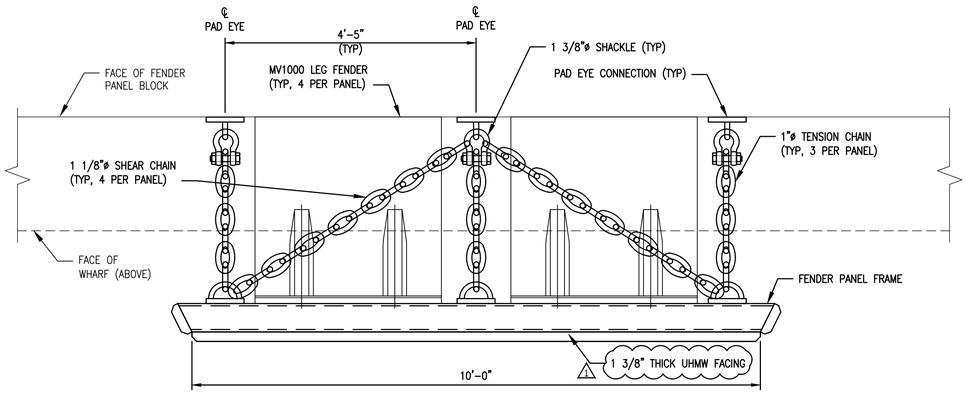

C1 FENDER PANEL DETAIL – EL 11.3

SCALE: ¾"=1'-0"

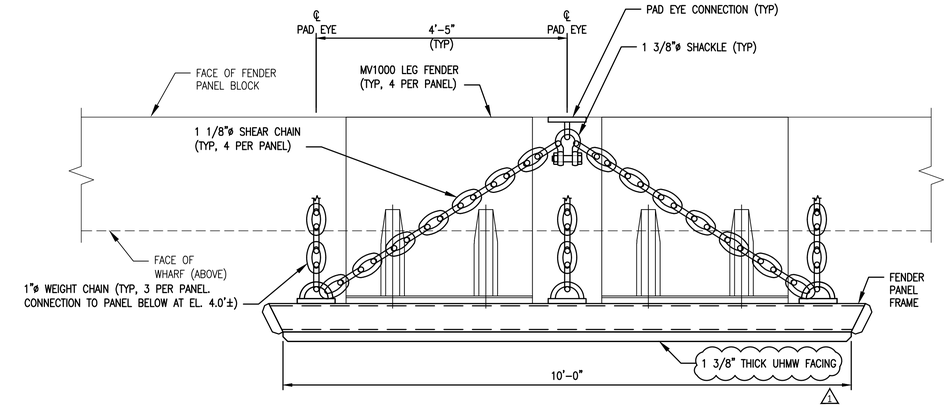

C4 FENDER PANEL DETAIL – EL 7.6

SCALE: ¾"=1'-0"

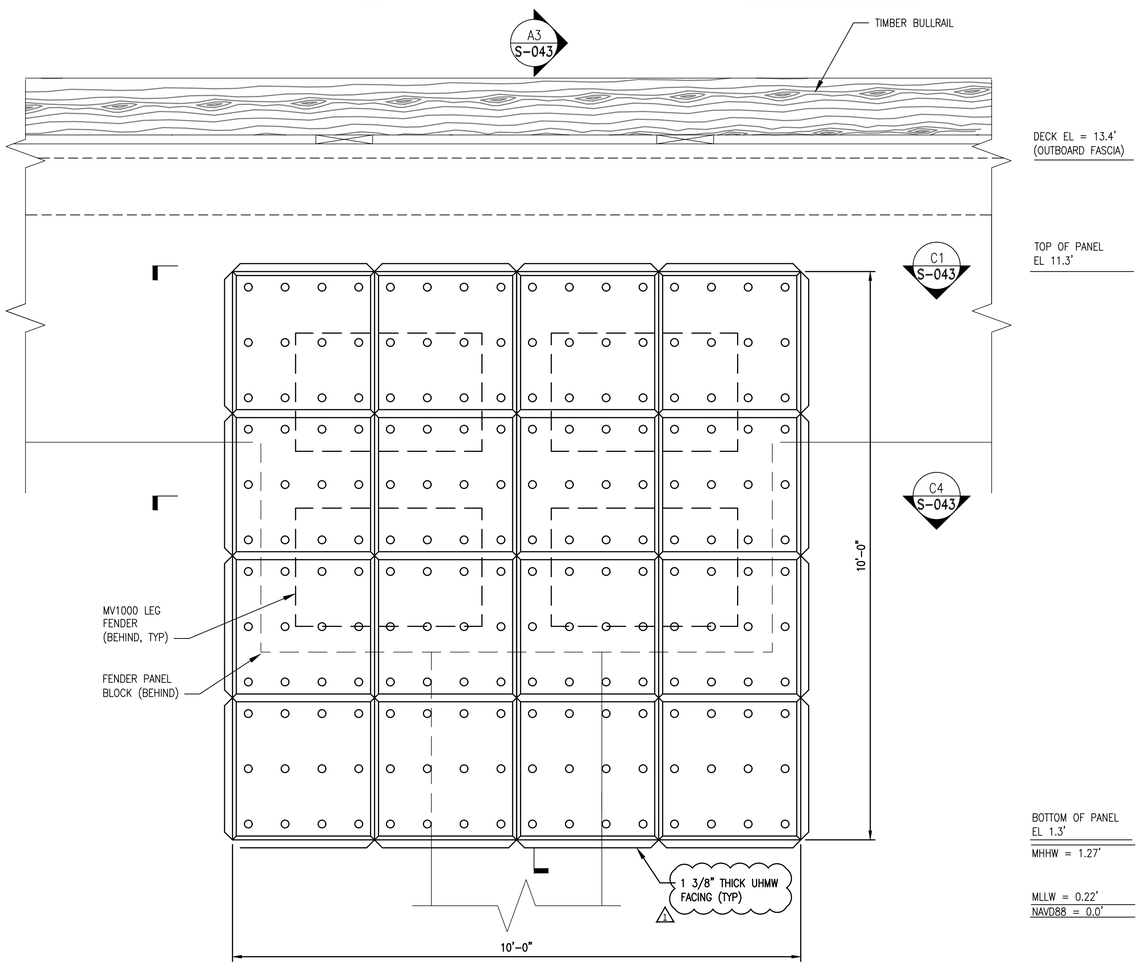

A1 FENDER PANEL ELEVATION

SCALE: ¾"=1'-0"

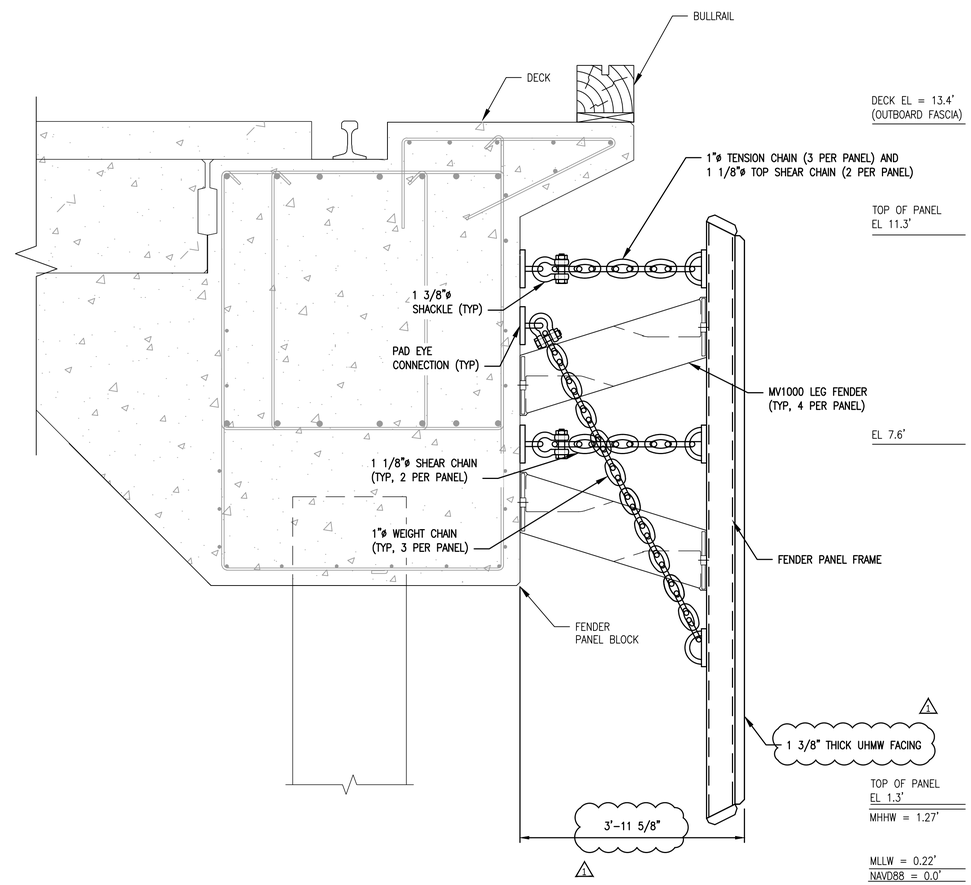

A3 FENDER PANEL SECTION

SCALE: ¾"=1'-0"

Berth 6 Expansion

Port of Port Arthur
P.O. Box 1428
Port Arthur, Texas 77641

COLLINS ENGINEERS INC.
501 PROCTER ST., SUITE 324
PORT ARTHUR, TX 77640
409-895-2550
WWW.COLLINSENGR.COM
TX-FIRM F-9791

8/25/21
STATE OF TEXAS
MICHAEL J. SCHNEIDER
112407
LICENSED PROFESSIONAL ENGINEER

COLLINS ENGINEERS, INC. SEAL
TEXAS REGISTERED ENGINEERING FIRM F-9791

REVISIONS

NO.	DESCRIPTION	DATE
1	ADDENDUM 2	8/25/21

FOR BIDDING ONLY
NOT FOR CONSTRUCTION

Designed by:	ZDJ
Drawn by:	BRB
Checked by:	WWM
Reviewed by:	MJS
Revisions by:	

PROJECT NO. 8.334
DATE: 06/23/2021

PORT OF PORT ARTHUR

BERTH 6 EXPANSION

PORT ARTHUR TX

STRUCTURAL

FENDER SYSTEM DETAIL

DISCIPLINE/SHT NO S-043

SHEET 88 OF 110

DRAWFORM REVISION: 31 JANUARY 2017

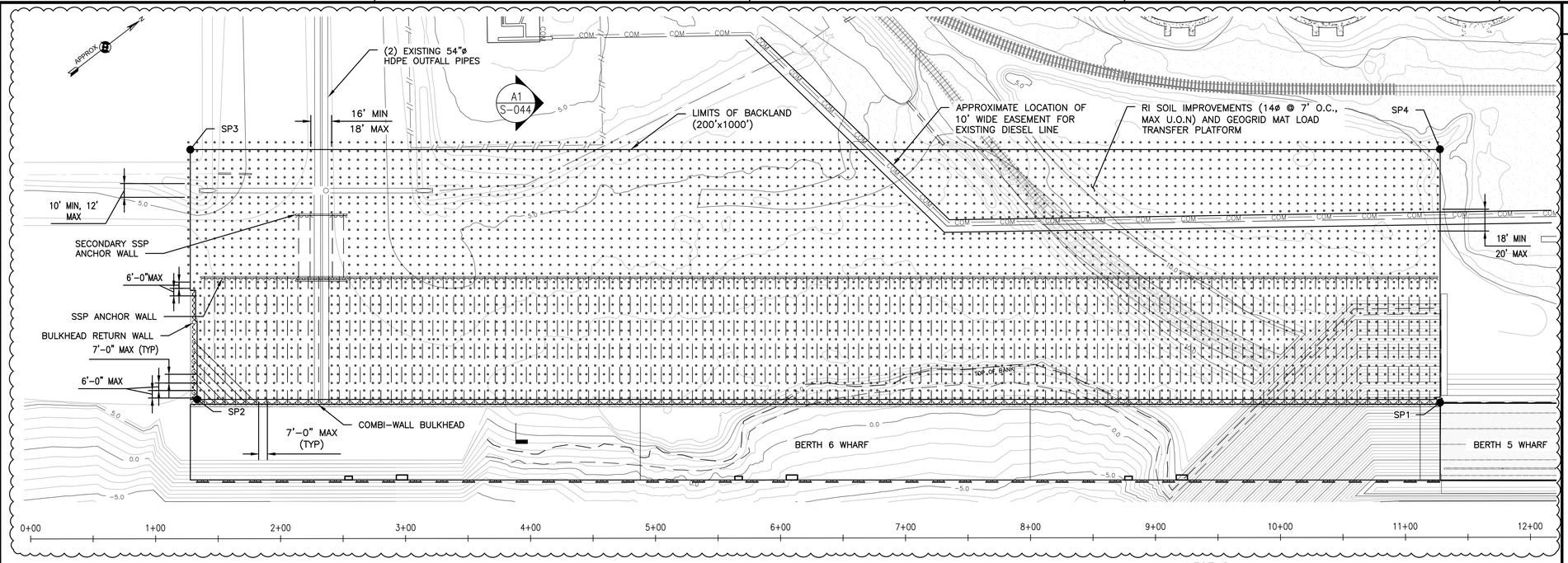

BACKLAND SOIL IMPROVEMENTS PLAN

SCALE: 1"=50'

PLAN NORTH

0 50' 100'

LEGEND:

	EXISTING MINOR CONTOUR (1-FT)
5	EXISTING MAJOR CONTOUR (5-FT)
	EXISTING FENCE
UGE	EXISTING UNDERGROUND ELECTRICAL UTILITY
COM	EXISTING UNDERGROUND TELECOMMUNICATION UTILITY
	EXISTING LIGHT POST
0+00	STATIONING (STATIONING GRAPHICALLY OFFSET FROM ACTUAL BASELINE. SEE BASELINE WORKING POINTS)
DBP1	WORKING POINT AND ID

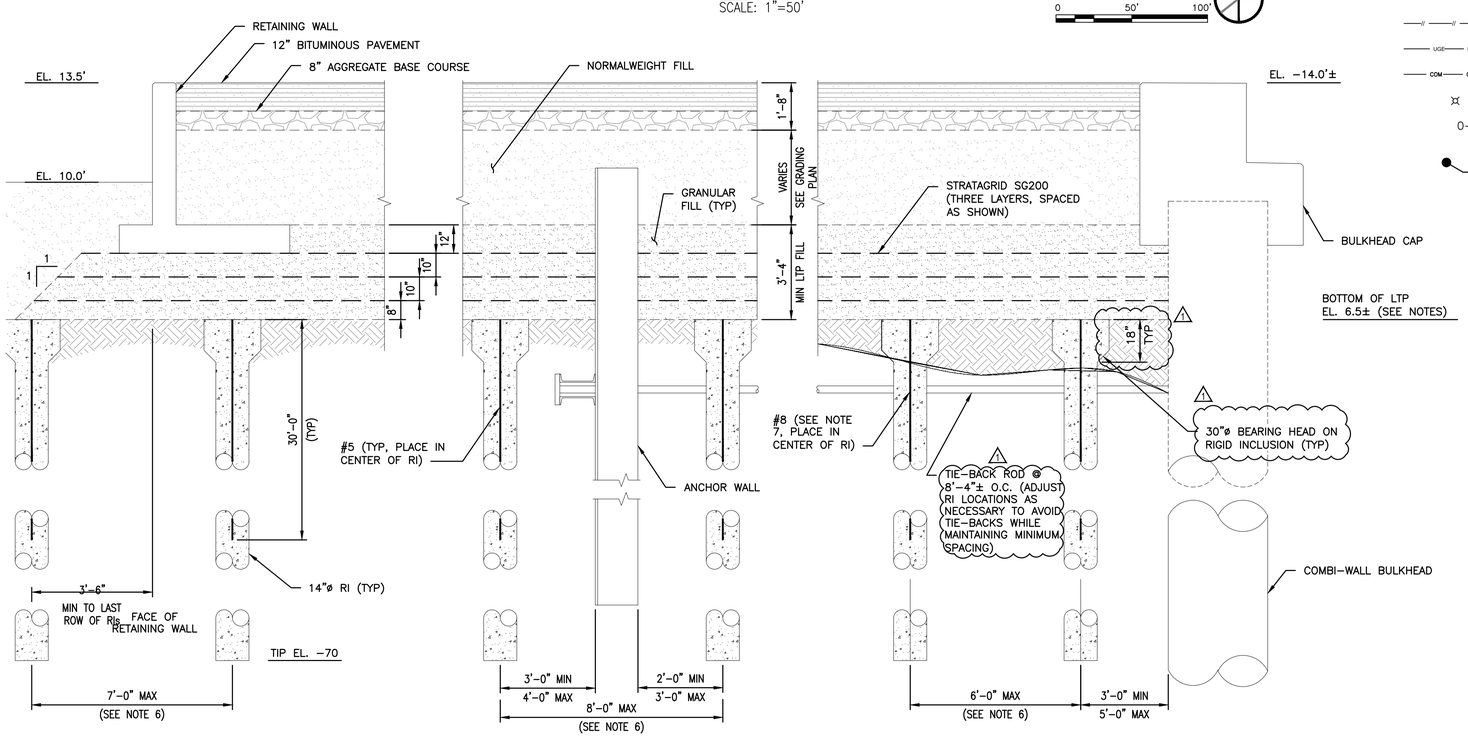

A1 TYPICAL BRACKLAND SOIL IMPROVEMENTS SECTION

SCALE: 3/8"=1'-0"

0 2' 4' 6'

NOTES

1. BACKLAND IMPROVEMENTS SHOWN PROVIDE GROUND STABILIZATION AND LOAD TRANSFER AS NECESSARY TO RESULT IN ACCEPTABLE LONG-TERM SETTLEMENT AND RESULTING SOIL PRESSURES ACTING ON THE BULKHEAD WALL UNDER THE DESIGN CONDITIONS. THE CONTRACTOR MAY PROPOSE AN ALTERNATIVE GROUND IMPROVEMENT METHOD PROVIDED IT MEETS THE PERFORMANCE REQUIREMENTS OUTLINED IN THE PROJECT SPECIFICATIONS.
2. THE INTENT IS TO INSTALL THE RIGID INCLUSIONS PRIOR TO INSTALLATION OF THE ANCHOR WALL AND TIE-BACK SYSTEM. REFER TO THE PROJECT PHASING PLAN.
3. BOTTOM OF GEOGRID MAT IS SHOWN BASED ON APPROXIMATE ANTICIPATED GRADE AFTER LEVELING THE EXISTING SITE, PRIOR TO THE ADDITION OF FILL NECESSARY FOR RAISING THE GRADE. CONTRACTOR MAY ADD SUPPLEMENTARY FILL AS NECESSARY TO ESTABLISH A CONSISTENT GRADE FOR PLACEMENT OF THE RIGID INCLUSIONS AND GEOGRID MAT; HOWEVER, BOTTOM OF GEOGRID MAT SHALL BE NO HIGHER THAN EL. 8.0 AT ANY POINT. GRADE PRIOR TO PLACEMENT OF GEOGRID MAT MAY HAVE A SLOPE UP TO 2% TO MAINTAIN MINIMUM THICKNESS OF PAVEMENT AND BASE COURSE.
4. CONTRACTOR IS RESPONSIBLE FOR PROTECTING THE GEOGRID MAT FROM DAMAGE DURING CONSTRUCTION OPERATIONS.
5. COORDINATE RIGID INCLUSION LOCATIONS WITH UTILITIES AND OTHER BACKLAND SITE FEATURES THAT MAY BE IMPACTED BY THE WORK.
6. TYPICAL RIGID INCLUSION SPACING SHALL BE A MAXIMUM OF 7' O.C., EXCEPT AS NOTED BELOW.
   a. RIGID INCLUSION SPACING, PERPENDICULAR TO THE BULKHEAD, BETWEEN THE FIRST THREE ROWS ON THE SOUTHEAST SIDE OF THE ANCHOR WALL AND FIRST THREE ROWS BEHIND THE BULKHEAD WALL SHALL BE 6' O.C.
   b. RIGID INCLUSIONS SHALL BE SPACED A MINIMUM OF 4'-0" AND A MAXIMUM OF 6'-0" FROM THE EDGE OF THE DIESEL LINE EASEMENT.
   c. RIGID INCLUSIONS SHALL BE SPACED A MINIMUM OF 3'-0" AND A MAXIMUM OF 5'-0" FROM THE EDGE OF THE FOLEY OUTFALL PIPES AND CONNECTING STORMWATER PIPES.
7. TYPICAL REBAR IN RIGID INCLUSION SHALL BE #5, EXCEPT FOR THE FIRST THREE ROWS ON THE SOUTHEAST SIDE OF THE ANCHOR WALL AND FIRST THREE ROWS BEHIND THE BULKHEAD WALL, WHICH SHALL BE #8 REBAR.
8. GEOGRID SG200 (OR APPROVED EQUAL) SHALL HAVE AN ULTIMATE STRENGTH OF 3,600 LB/FT, AND A CREEP LIMITED STRENGTH OF 2,323 LB/FT.

Berth 6 Expansion

Port of Port Arthur
P.O. Box 1428
Port Arthur, Texas 77641

COLLINS ENGINEERS INC
501 PROCTER ST., SUITE 324
PORT ARTHUR, TX 77640
409-895-2550
WWW.COLLINSENGR.COM
TX-FIRM F-9791

8/25/21

STATE OF TEXAS
MICHAEL J. SCHNEIDER
112407
LICENSED PROFESSIONAL ENGINEER

COLLINS ENGINEERS, INC. SEAL
TEXAS REGISTERED ENGINEERING FIRM F-9791

REVISIONS

NO.	DESCRIPTION	DATE
1	ADDENDUM 2	8/25/21

FOR BIDDING ONLY
NOT FOR CONSTRUCTION

Designed by:	ZDJ
Drawn by:	BRB
Checked by:	WWM
Reviewed by:	MJS
Revisions by:	

PROJECT NO. 8.334
DATE: 06/23/2021

PORT OF PORT ARTHUR

BERTH 6 EXPANSION

PORT ARTHUR TX

STRUCTURAL

BACKLAND SOIL IMPROVEMENTS

DISCIPLINE/SHT NO
S-044

SHEET 89 OF 110

DRAWFORM REVISION: 31 JANUARY 2017

FILE NAME: \\cosun-nt\n\regular projects\15-10615.00 popa berth 6\06 - engineering\02 - drawings\working design drawings\S-044.dwg LAYOUT NAME: S-044 BACKLAND SOIL IMPROVEMENTS PLOTTED: Wednesday, August 25, 2021 - 5:32pm USER: ghoyt

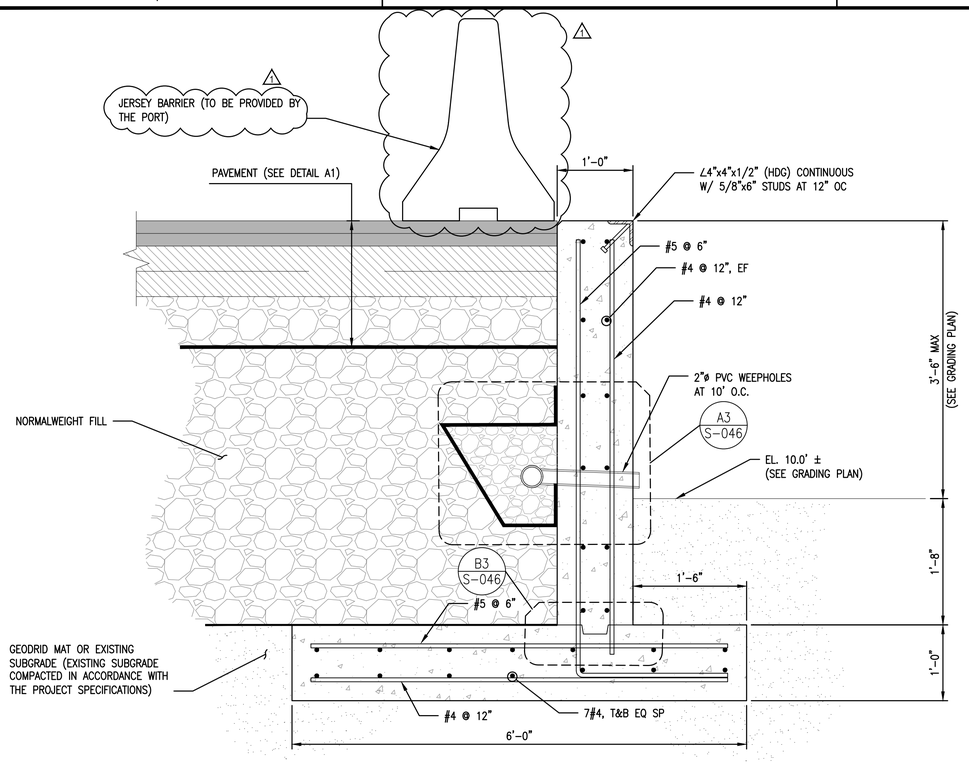

C1 NORTH AND NORTHWEST CONCRETE RETAINING WALL – SECTION
SCALE: 1"=1'-0"

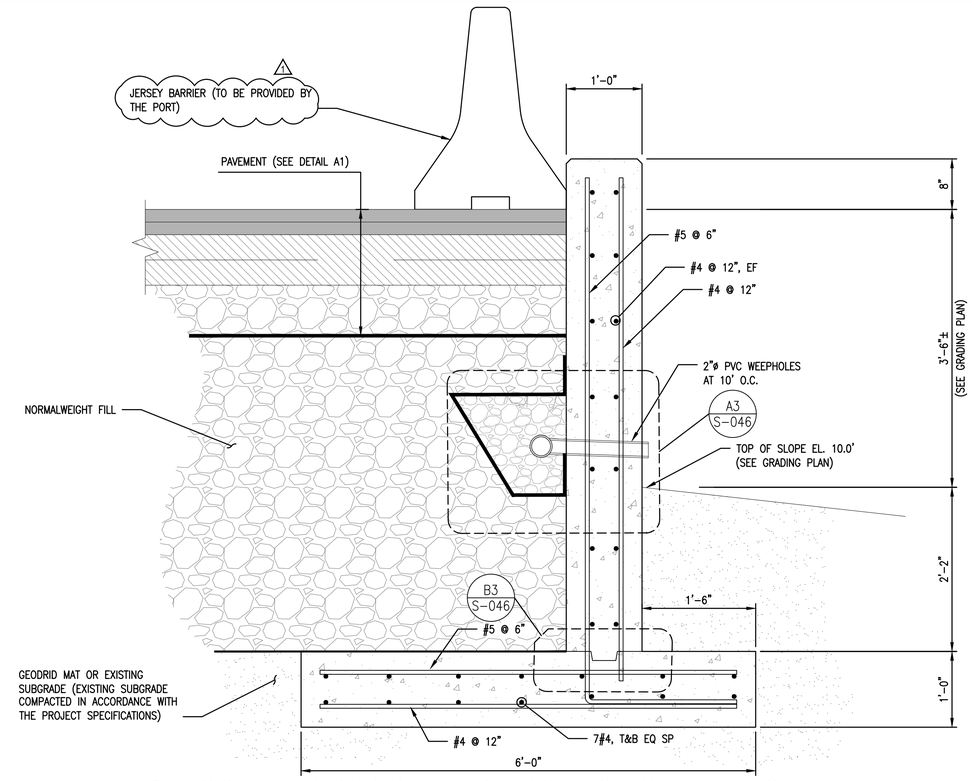

C3 SOUTH CONCRETE RETAINING WALL – SECTION
SCALE: 1"=1'-0"

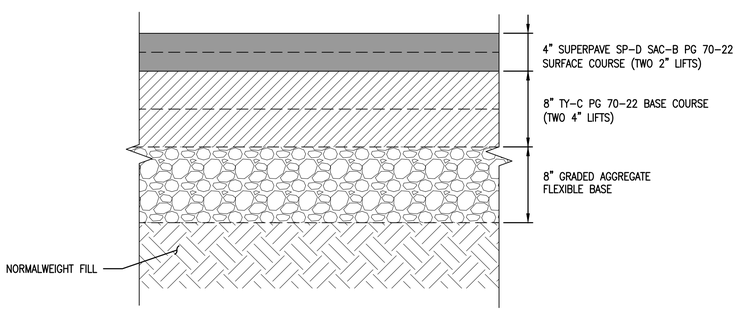

A1 TYPICAL PAVING SECTION
SCALE: 1½"=1'-0"

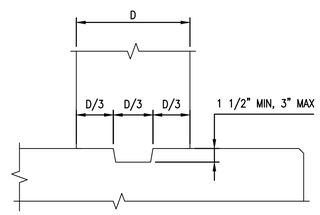

B3 RETAINING WALL KEYWAY
SCALE: 1½"=1'-0"

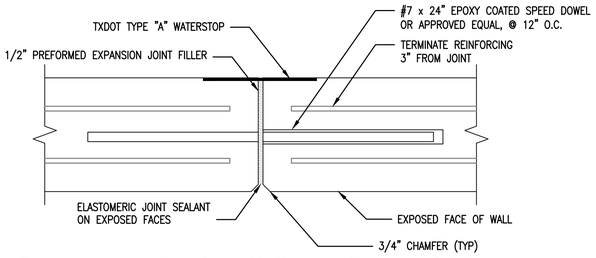

B4 WALL EXPANSION JOINT DETAIL
NTS
PROVIDE EXPANSION JOINTS AT 100' MAXIMUM SPACING (EVERY 4TH CONSTRUCTION JOINT)

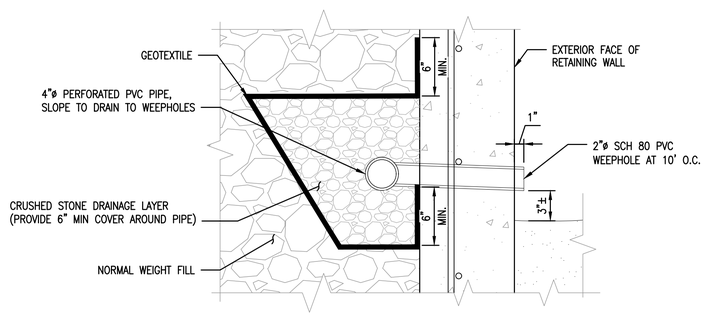

A3 TYPICAL RETAINING WALL WEEPHOLE DETAIL
SCALE: 1½"=1'-0"

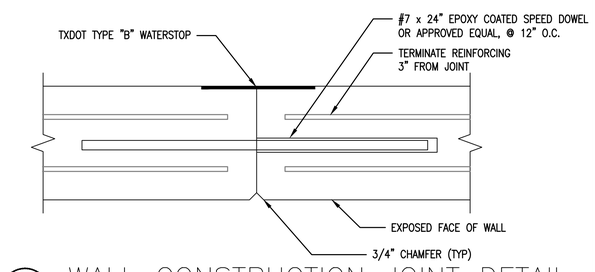

A4 WALL CONSTRUCTION JOINT DETAIL
NTS
PROVIDE CONSTRUCTION JOINTS AT 25 MAXIMUM SPACING. LOCATE A MINIMUM OF 5 FEET AND MAXIMUM OF 10 FEET FROM WALL CORNERS.

Berth 6 Expansion

PORT OF PORT ARTHUR

Port of Port Arthur
P.O. Box 1428
Port Arthur, Texas 77641

COLLINS ENGINEERS INC.
501 PROCTER ST., SUITE 324
PORT ARTHUR, TX 77640
409-895-2550
WWW.COLLINSENGR.COM
TX-FIRM F-9791

8/25/21
STATE OF TEXAS
MICHAEL J. SCHNEIDER
112407
LICENSED PROFESSIONAL ENGINEER
COLLINS ENGINEERS, INC. SEAL
TEXAS REGISTERED ENGINEERING FIRM F-9791

REVISIONS

NO.	DESCRIPTION	DATE
1	ADDENDUM 2	8/25/21

FOR BIDDING ONLY
NOT FOR CONSTRUCTION

Designed by:	ZDJ
Drawn by:	BRB
Checked by:	WWM
Reviewed by:	MJS
Revisions by:	

PROJECT NO. 8.334
DATE: 06/23/2021

PORT OF PORT ARTHUR
BERTH 6 EXPANSION
PORT ARTHUR TX

STRUCTURAL
BACKLAND DETAILS

DISCIPLINE/SHT NO S-046
SHEET 91 OF 110

DRAWFORM REVISION: 31 JANUARY 2017

FILE NAME: \\vosuni-wh\wh\regular projects\15-10615.00 ppa berth 6\06 – engineering\02 – drawings\working design drawings\S-046.dwg LAYOUT NAME: BACKLAND DETAILS PLOTTED: Wednesday, August 25, 2021 – 5:32pm USER: ghoyt

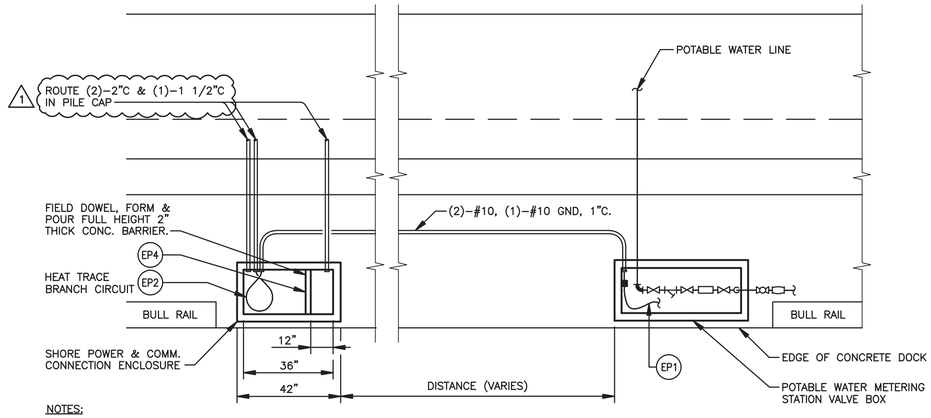

NOTES:
ENCLOSURE LIDS OMITTED FOR CLARITY. EXACT LOCATIONS & ARRANGEMENTS VARIES. REFER TO STRUCTURAL SHEETS FOR EXACT LOCATIONS AND REQUIREMENTS.

1 ELECTRICAL BOX DETAIL
SCALE: NOT TO SCALE

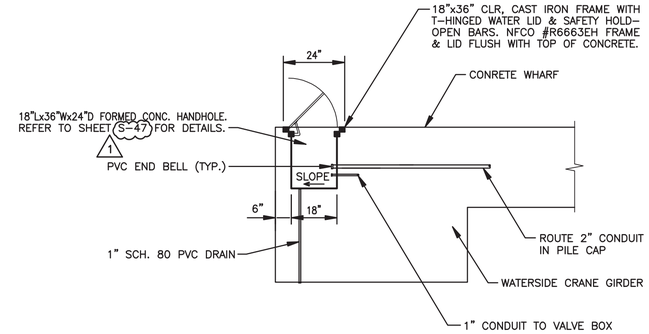

2 ELECTRICAL BOX SECTION DETAIL
SCALE: NOT TO SCALE

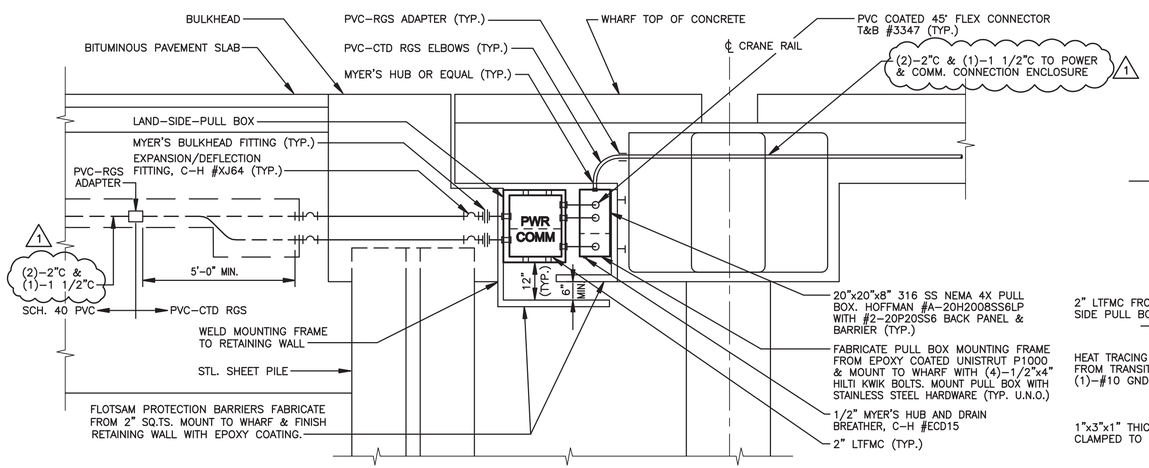

3 ELECTRICAL BOX DETAIL (WHARF CONNECTION)
SCALE: NOT TO SCALE

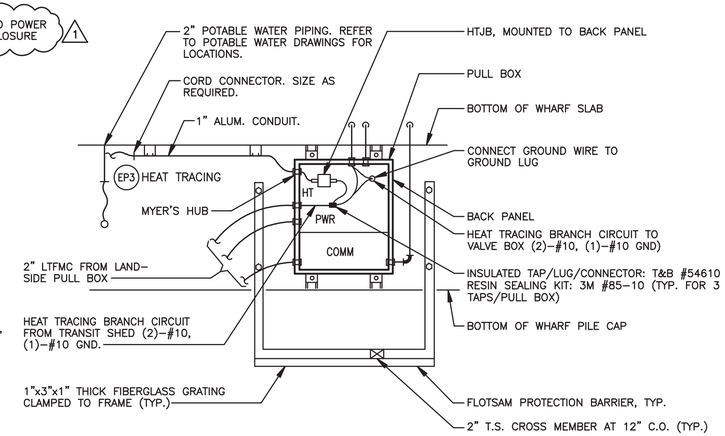

4 ELECTRICAL BOX HEAT TRACING DETAIL
SCALE: NOT TO SCALE

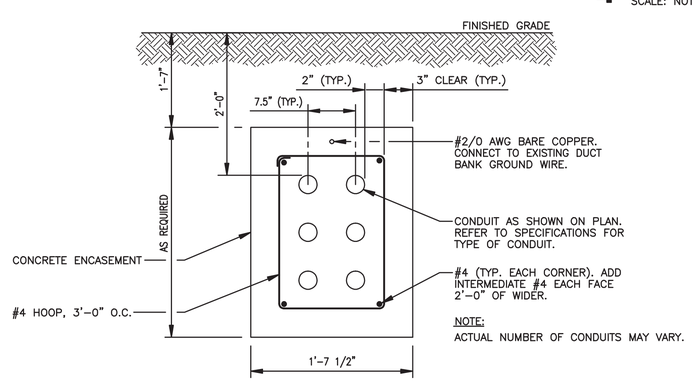

NOTE:
ACTUAL NUMBER OF CONDUITS MAY VARY.

5 DUCT BANK DETAIL
SCALE: NOT TO SCALE

ELECTRICAL PLAN NOTES

EP1 HEAT TRACE THE INSULATED 2" POTABLE WATER PIPING FROM THE POINT OF EMERGENCE WITHIN THE VALVE BOX TO THE VERTICAL RISER UNION NEAR GRADE. INSTALL HEAT TRACING IN ACCORDANCE PER MANUFACTURERS RECOMMENDATIONS & INSTRUCTIONS. REFER TO SHEET E-006.

EP2 INSTALL EXPOSED PORTION OF HEAT TRACING BRANCH CIRCUIT IN FLEXIBLE NONMETALLIC TUBING TO PROTECT AGAINST DAMAGE BY FUTURE SHORE POWER CONNECTOR.

EP3 HEAT TRACE ALL EXPOSED POTABLE WATER PIPING UNDER WHARF.

EP4 PROVIDE 1" HOLE IN WALL AT FLOOR FOR DRAINAGE BETWEEN SECTIONS.

EP5 PROVIDE GROUND FAULT CURRENT INTERRUPTER FOR HEAT TRACING CIRCUITS.

EP6 REFER TO SHEET S-031, ELECTRICAL VAULT PLANS, SECTIONS AND DETAILS FOR EXACT LOCATION AND INSTALLATION.

Berth 6 Expansion

Port of Port Arthur
P.O. Box 1428
Port Arthur, Texas 77641

COLLINS ENGINEERS INC
501 PROCTER ST., SUITE 321
PORT ARTHUR, TX 77640
409-895-2550
WWW.COLLINSENGR.COM

MEPTech Engineering, Inc.
TBPE FIRM # F-10227
5090 ADA AVENUE
BEAUMONT, TEXAS 77708
PHONE: (409) 673-2013
FAX: (409) 767-9224

STATE OF TEXAS
L. L. LASERNA
89546
LICENSED PROFESSIONAL ENGINEER
6/25/21
MEPTech Engineering, Inc.
TEXAS REGISTERED ENGINEERING FIRM F-10227

REVISIONS

	DESCRIPTION	DATE
1	ADDENDUM 2	8/25/2021

FOR BIDDING ONLY NOT FOR CONSTRUCTION

Designed by: LLL
Drawn by: LLL
Checked by: LLL
Reviewed by: LLL
Revisions by:

PROJECT NO. 8.334
DATE: 06/23/2021

PORT OF PORT ARTHUR

BERTH 6 EXPANSION

PORT ARTHUR TX

GENERAL

ELECTRICAL DETAILS

DISCIPLINE/SHT NO
E-003

SHEET 104 OF 110

DRAWFORM REVISION: 31 JANUARY 2017

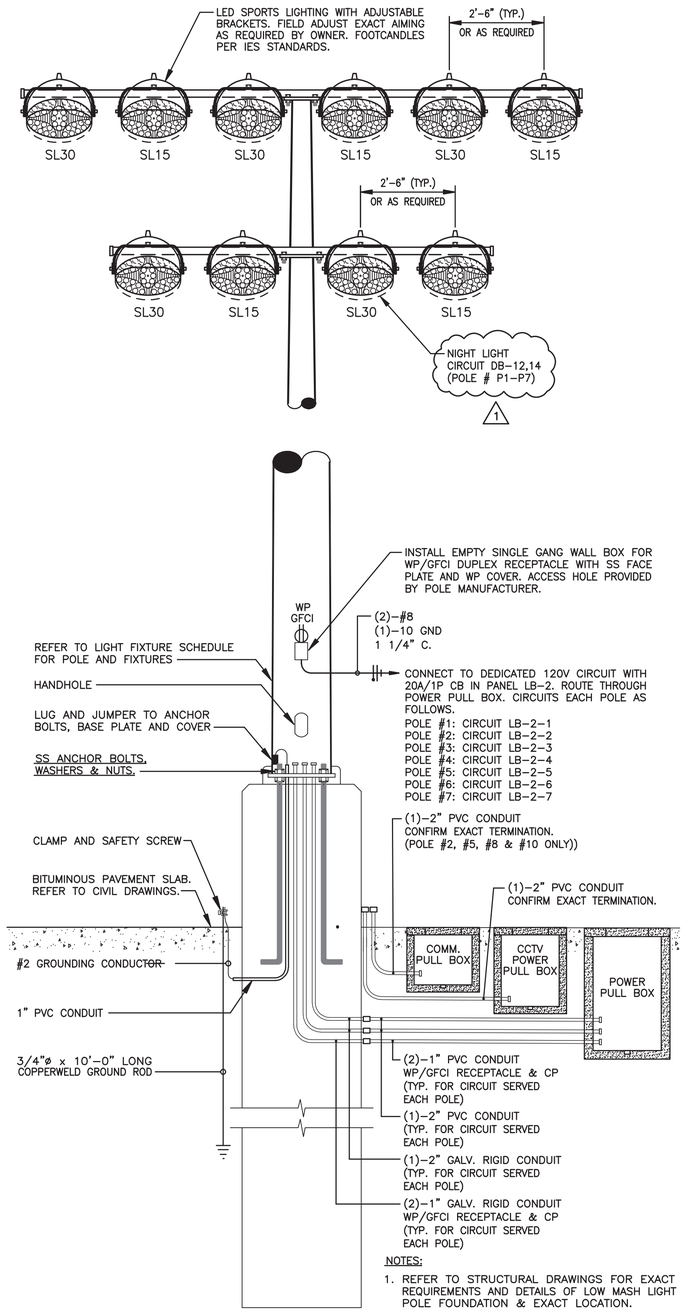

NOTES:

1. REFER TO STRUCTURAL DRAWINGS FOR EXACT REQUIREMENTS AND DETAILS OF LOW MASH LIGHT POLE FOUNDATION & EXACT LOCATION.
2. REFER TO THIS SHEET LIGHT FIXTURE SCHEDULE.
3. POWER, CCTV & COMM. COVER MUST BE HEAVY DUTY AND DRIVE THRU RATED. CONFIRM WITH OWNER.
4. REFER TO SHEET E-002 FOR NUMBER OF PULL BOXES REQUIRED.

2 LIGHT FIXTURE TYPE "S2"

SCALE: NOT TO SCALE

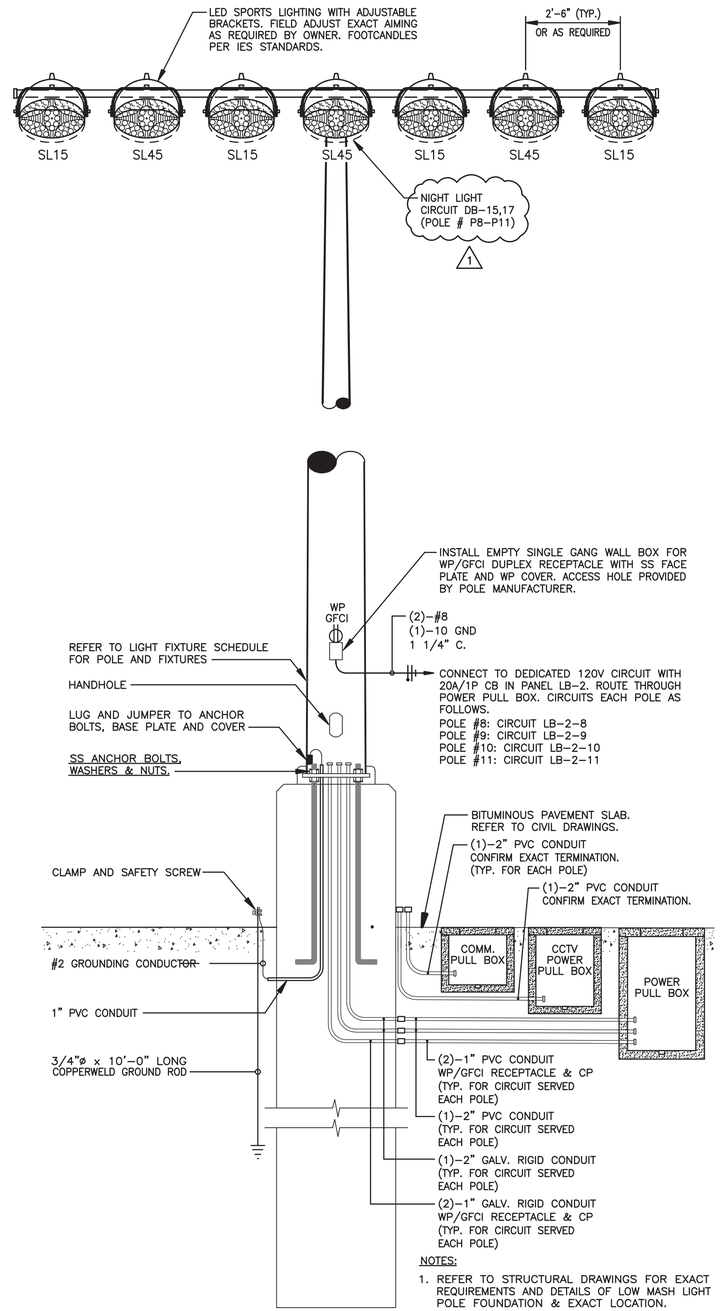

NOTES:

1. REFER TO STRUCTURAL DRAWINGS FOR EXACT REQUIREMENTS AND DETAILS OF LOW MASH LIGHT POLE FOUNDATION & EXACT LOCATION.
2. REFER TO THIS SHEET LIGHT FIXTURE SCHEDULE.
3. POWER, CCTV & COMM. COVER MUST BE HEAVY DUTY AND DRIVE THRU RATED. CONFIRM WITH OWNER.
4. REFER TO SHEET E-002 FOR NUMBER OF PULL BOXES REQUIRED.

1 LIGHT FIXTURE TYPE "S1"

SCALE: NOT TO SCALE

LIGHT FIXTURE SCHEDULE

MARK	MANUFACTURER	MODEL NO.	LAMPS	VOLTAGE	REMARKS
S1	SPECGRADE	(4)-SPL3R-300-50K-N2(SL15)-V04(480) -BL-TM-VDIM (3)-SPL3R-300-50K-N4(SL45)-V04(480) -BL-TM-VDIM	(7)-300W LED (INPUT WATTS = 2100 EACH POLE)	480	LED SPORTSLIGHTER WITH SEAMLESS COLD FORGED HEAT SINK & DIE-CAST HOUSING, SUPERIOR OPTICS FOR EXCEPTIONAL BEAM UNIFORMITY, LASER AIMING ATTACHMENT, VISOR SURGE SUPPRESSION, STAINLESS STEEL HARDWARE BLACK PROTECTIVE UV STABILIZED POWDER COAT FINISH AND POLYCARBONATE LENS. UL LISTED FOR WET LOCATIONS. 45 FT. GALVANIZED ROUND TAPERED STEEL POLE, CROSSARM, BASE PLATE/COVER, ANCHOR BOLTS, HANDHOLE AND STAINLESS STEEL HARDWARE/ACCESSORIES FURNISHED BY LIGHT FIXTURES MANUFACTURER AND INSTALLED BY ELECTRICAL/GENERAL CONTRACTOR.
S2	SPECGRADE	(2)-SPL3R-300-50K-N2(SL15)-V04(480) -BL-TM-VDIM (2)-SPL3R-300-50K-N3(SL30)-V04(480) -BL-TM-VDIM ø42 FT. (3)-SPL3R-300-50K-N2(SL15)-V04(480) -BL-TM-VDIM (3)-SPL3R-300-50K-N3(SL30)-V04(480) -BL-TM-VDIM ø45 FT.	(10)-300W LED (INPUT WATTS = 3000 EACH POLE)	480	LED SPORTSLIGHTER WITH SEAMLESS COLD FORGED HEAT SINK & DIE-CAST HOUSING, SUPERIOR OPTICS FOR EXCEPTIONAL BEAM UNIFORMITY, LASER AIMING ATTACHMENT, VISOR SURGE SUPPRESSION, STAINLESS STEEL HARDWARE BLACK PROTECTIVE UV STABILIZED POWDER COAT FINISH AND POLYCARBONATE LENS. UL LISTED FOR WET LOCATIONS. 45 FT. GALVANIZED ROUND TAPERED STEEL POLE, CROSSARM, BASE PLATE/COVER, ANCHOR BOLTS, HANDHOLE AND STAINLESS STEEL HARDWARE/ACCESSORIES FURNISHED BY LIGHT FIXTURES MANUFACTURER AND INSTALLED BY ELECTRICAL/GENERAL CONTRACTOR.

NOTES

LIGHT FIXTURES AND POLE MUST BE RATED AT LEAST 130 MPH AS REQUIRED BY TEXAS WINDSTORM. WINDSTORM CERTIFICATE OF COMPLIANCE SHALL BE ISSUED TO OWNER.

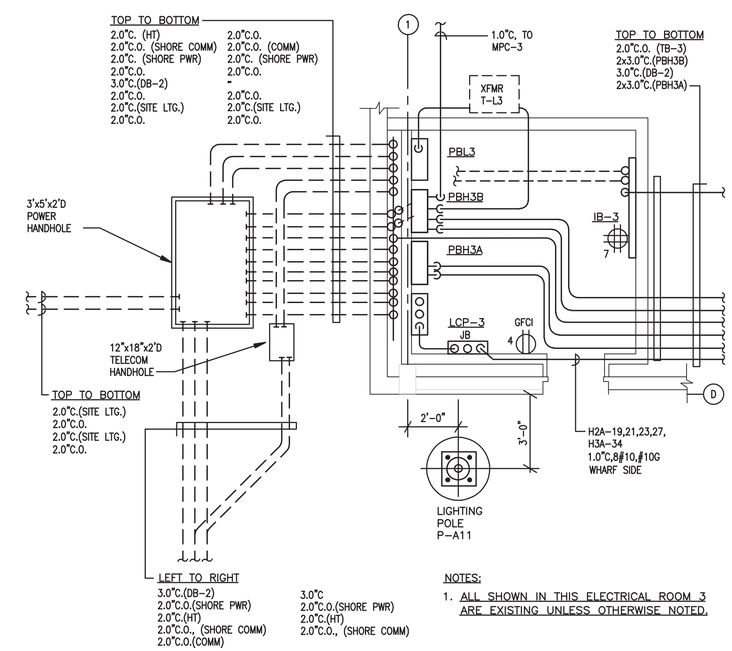

NOTES:

1. ALL SHOWN IN THIS ELECTRICAL ROOM 3 ARE EXISTING UNLESS OTHERWISE NOTED.

PLAN NORTH

3 ENLARGED EXISTING ELECTRICAL ROOM 3 PLAN

SCALE: NOT TO SCALE

Berth 6 Expansion

Port of Port Arthur
P.O. Box 1428
Port Arthur, Texas 77641

COLLINS ENGINEERS INC
501 PROCTER ST., SUITE 321
PORT ARTHUR, TX 77640
409-895-2550
WWW.COLLINSENGR.COM

MEPTech Engineering, Inc.
TBPE FIRM # F-10227
5090 ADA AVENUE
BEAUMONT, TEXAS 77708
PHONE: (409) 673-2013
FAX: (409) 767-9224

STATE OF TEXAS
L. L. LASERNA
89546
LICENSED PROFESSIONAL ENGINEER
6/23/21
MEPTech Engineering, Inc.
TEXAS REGISTERED ENGINEERING FIRM F-10227

REVISIONS

	DESCRIPTION	DATE
1	ADDENDUM 2	8/25/2021

FOR BIDDING ONLY NOT FOR CONSTRUCTION

Designed by: LLL
Drawn by: LLL
Checked by: LLL
Reviewed by: LLL
Revisions by:

PROJECT NO. 8.334
DATE: 06/23/2021

PORT OF PORT ARTHUR

BERTH 6 EXPANSION

PORT ARTHUR TX

GENERAL

POLE LIGHT DETAILS, SCHEDULE & ELECTRICAL ROOM PLAN

DISCIPLINE/SHT NO
E-004

SHEET 105 OF 110

DRAWFORM REVISION: 31 JANUARY 2017

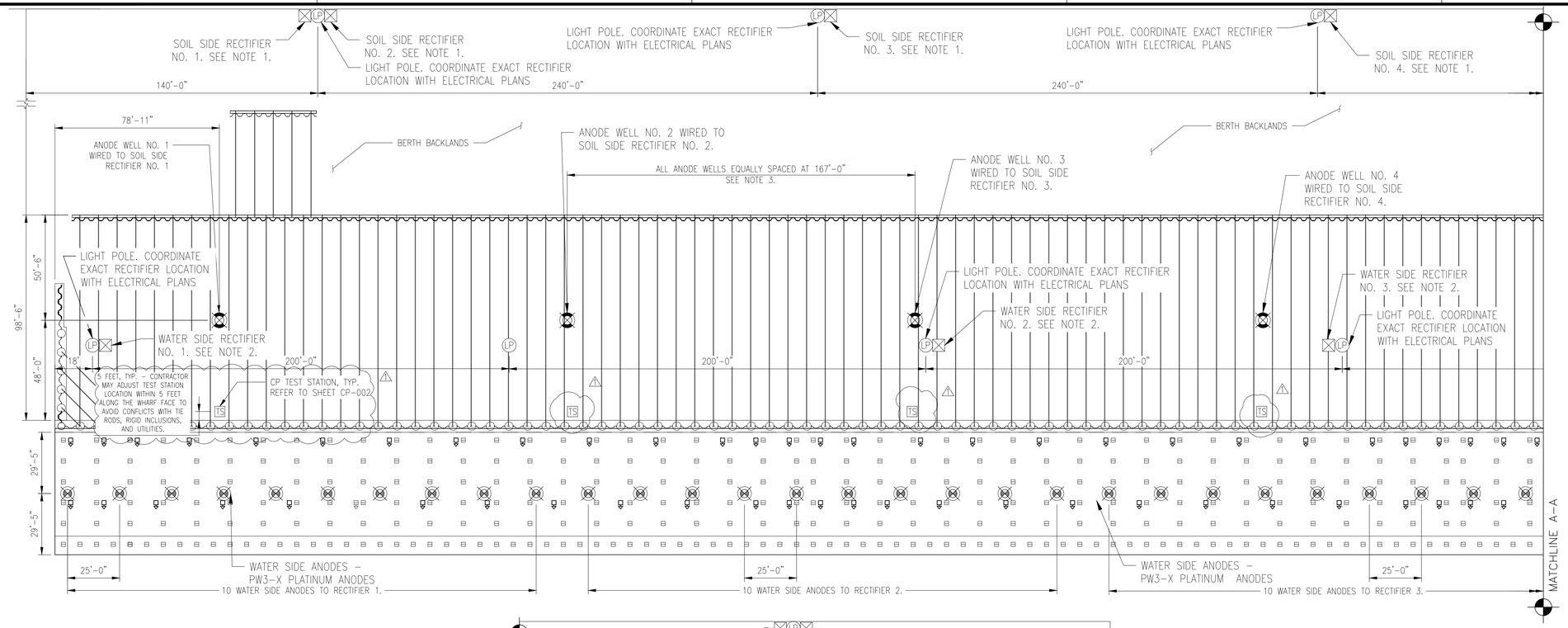

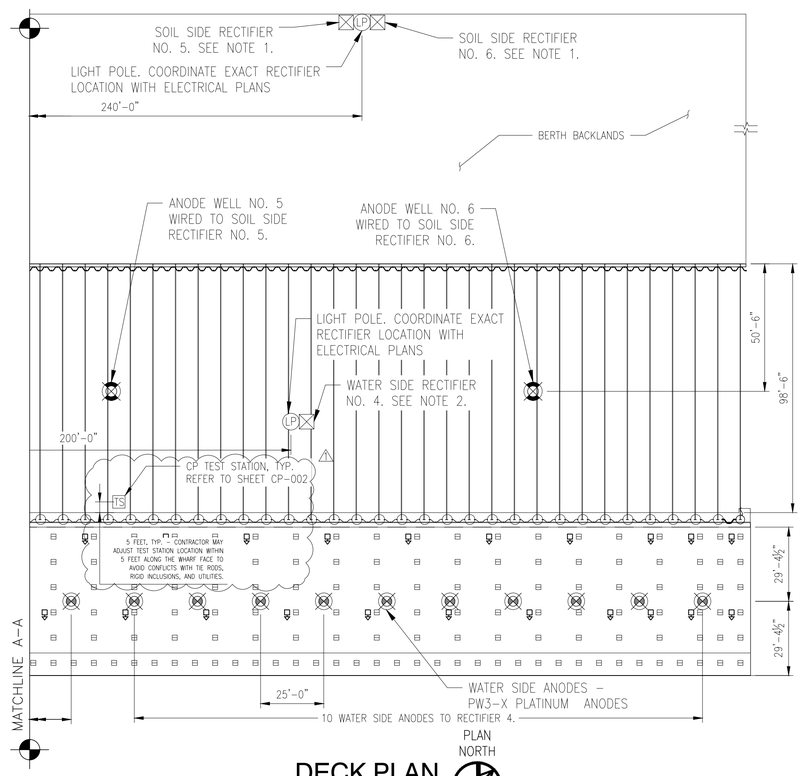

DECK PLAN

SCALE: N.T.S

NOTE:

1. ALL ANODE WELL AND RECTIFIER LOCATIONS ARE AN APPROXIMATION, REFER TO SPECIFICATIONS FOR MORE INFORMATION. CONTRACTOR SHALL COORDINATE WITH COLLINS REPRESENTATIVE FOR EXACT LOCATIONS.
   1.1. PROPOSED ANODE LOCATIONS MAY REQUIRE ADJUSTMENTS IN FIELD AS NECESSARY TO AVOID TIE-BACK RODS.
2. REFER TO SPECIFICATIONS FOR RECTIFIER REQUIREMENTS.
3. LOCATE TIE-BACK RODS AND CENTER ANODE WELLS IN BETWEEN.

Berth 6 Expansion

Port of Port Arthur
P.O. Box 1428
Port Arthur, Texas 77641

COLLINS ENGINEERS INC
501 PROCTER ST., SUITE 321
PORT ARTHUR, TX 77640
409-895-2550
WWW.COLLINSENGR.COM

VECTOR CORROSION SERVICES, INC.
8413 LAUREL FAIR CIRCLE
SUITE 200B
TAMPA, FL 33610
(813) 501-0050
WWW.VCSERVICES.COM
FL CA # 30851

STATE OF TEXAS
BRIAN M. PAILES
131712
LICENSED PROFESSIONAL ENGINEER

DATE: 6/23/2021
COLLINS ENGINEERS, INC.
TEXAS REGISTERED ENGINEERING FIRM F-9791
SEAL

REVISIONS

	DESCRIPTION	DATE
1	ADDENDUM 2	8/25/21

FOR BIDDING ONLY
NOT FOR CONSTRUCTION

Designed by:	S.Y.
Drawn by:	S.Y.
Checked by:	B.M.P
Reviewed by:	B.M.P
Revisions by:	

PROJECT NO. 8.334
DATE: 6/23/2021

PORT OF PORT ARTHUR

BERTH 6 EXPANSION

PORT ARTHUR TX

CATHODIC PROTECTION

BULKHEAD PLAN VIEW - ANODE LAYOUT

DISCIPLINE/SHT NO
CP-001

DRA#FORM REVISION: 31 JANUARY 2017

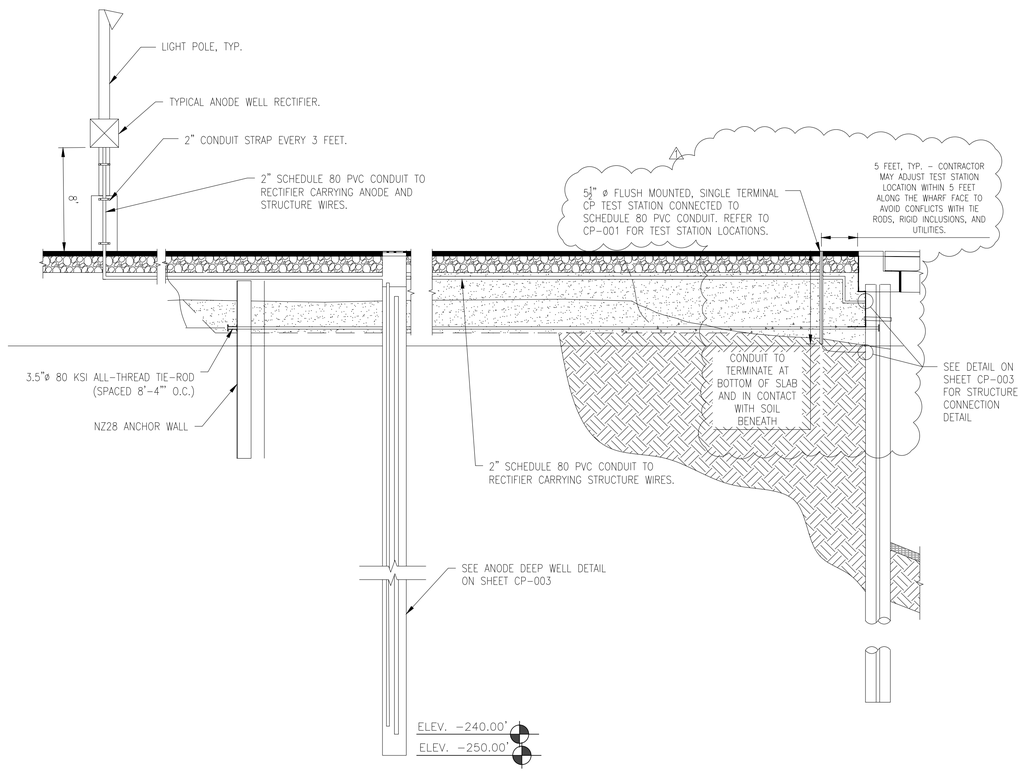

B1 SECTION VIEW OF ANODE WELL – SOIL SIDE

SCALE: N.T.S

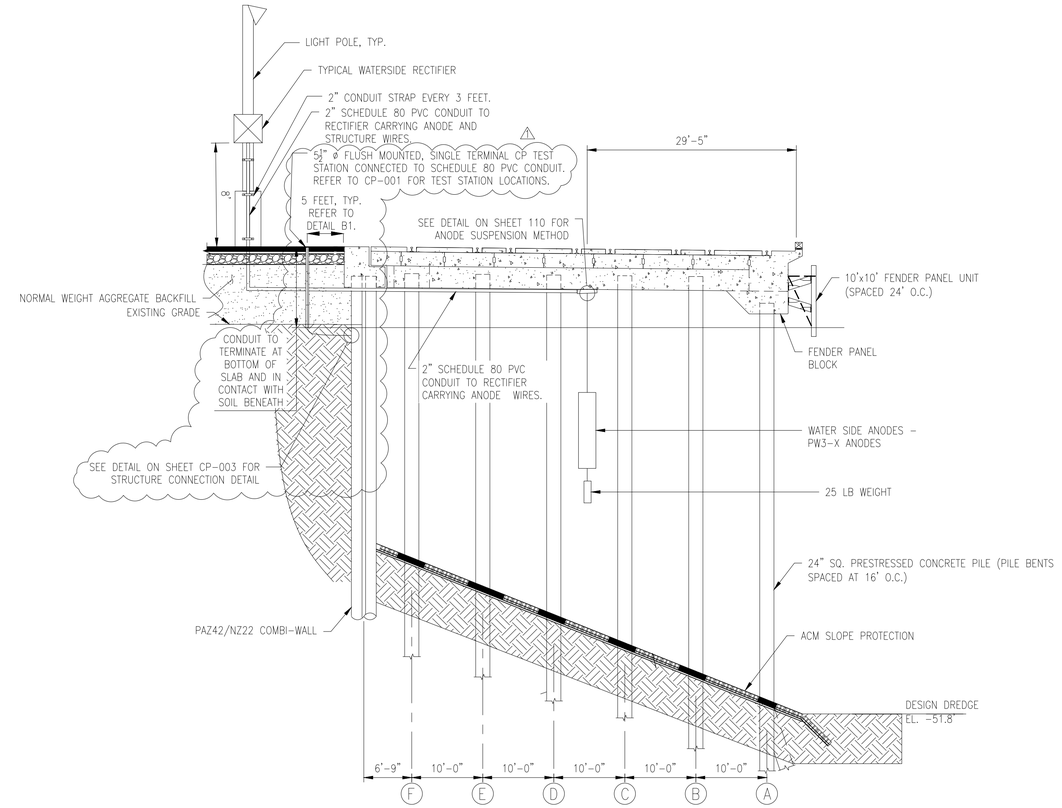

B4 SECTION VIEW OF WATER SIDE ANODE

SCALE: N.T.S

NOTE:

1. CONTRACTOR SHALL COORDINATE WITH OWNER REPRESENTATION FOR CONDUIT RUN.
2. CONTRACTOR SHALL COORDINATE WITH OWNER REPRESENTATIVE FOR EXACT LOCATION OF DEEP WELLS.

Berth 6 Expansion

Port of Port Arthur
P.O. Box 1428
Port Arthur, Texas 77641

COLLINS ENGINEERS INC
501 PROCTER ST., SUITE 321
PORT ARTHUR, TX 77640
409-895-2550
WWW.COLLINSENGR.COM

VCS
VECTOR CORROSION SERVICES, INC.
8413 LAUREL FAIR CIRCLE
SUITE 200B
TAMPA, FL 33610
(813) 501-0050
WWW.VCSERVICES.COM
FL CA # 30851

STATE OF TEXAS
BRIAN M. PAILES
131712
LICENSED PROFESSIONAL ENGINEER

DATE: 6/23/2021
COLLINS ENGINEERS, INC.
TEXAS REGISTERED ENGINEERING FIRM F-9791
SEAL

REVISIONS

	DESCRIPTION	DATE
1	ADDENDUM 2	8/25/21

FOR BIDDING ONLY
NOT FOR CONSTRUCTION

Designed by:	S.Y.
Drawn by:	S.Y.
Checked by:	B.M.P
Reviewed by:	B.M.P
Revisions by:	

PROJECT NO. 8.334
DATE: 6/23/2021

PORT OF PORT ARTHUR

BERTH 6 EXPANSION

PORT ARTHUR TX

CATHODIC PROTECTION

TYPICAL SECTION OF WATER SIDE AND SOIL SIDE ANODES

DISCIPLINE/SHT NO
CP-002

DRAWFORM REVISION: 31 JANUARY 2017

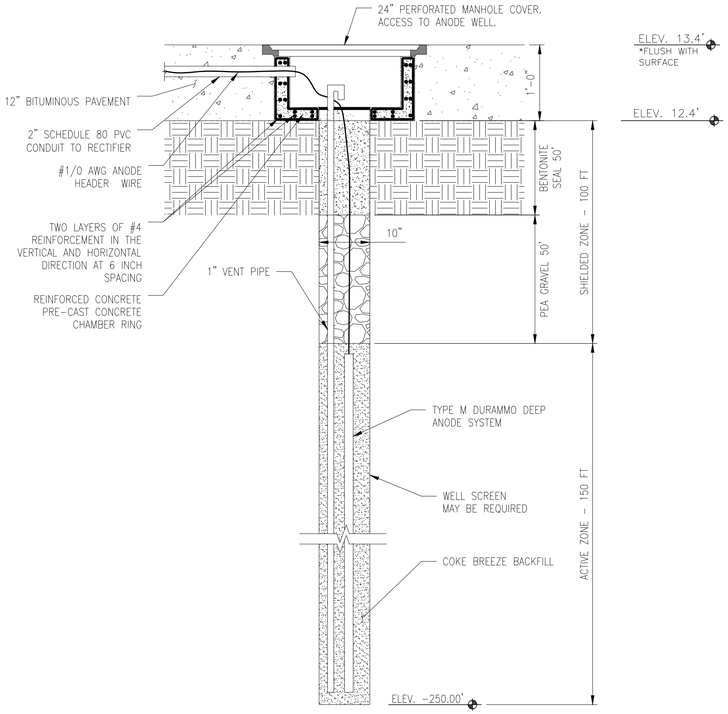

B1 SECTION VIEW OF TYPICAL ANODE WELL
SCALE: N.T.S

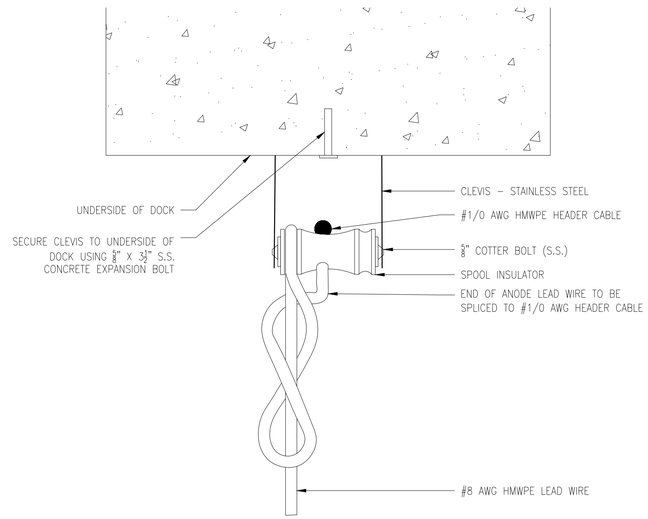

C2 TYPICAL ANODE SUSPENSION DETAIL
SCALE: N.T.S

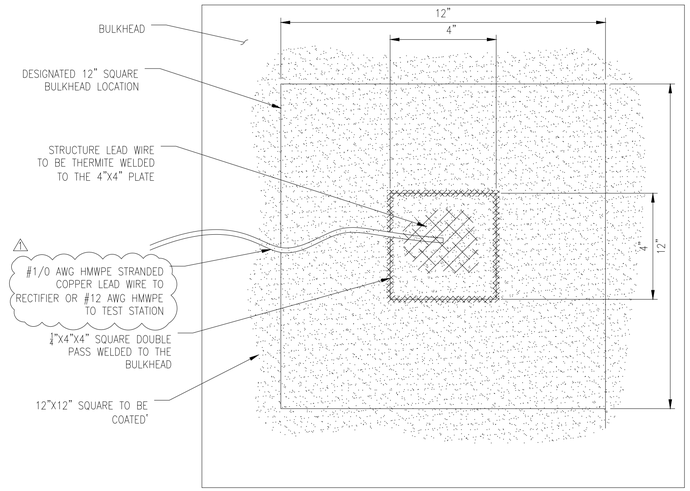

C4 TYPICAL STRUCTURE CONNECTION DETAIL
SCALE: N.T.S

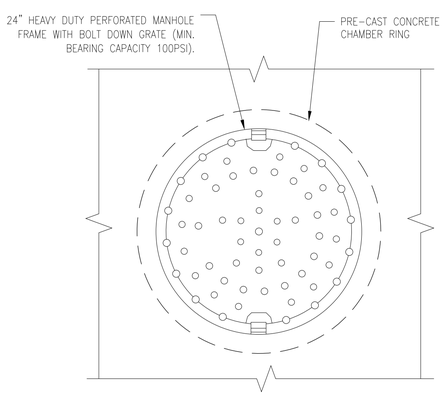

A1 TYPICAL PERFORATED MANHOLE DETAIL
SCALE: N.T.S

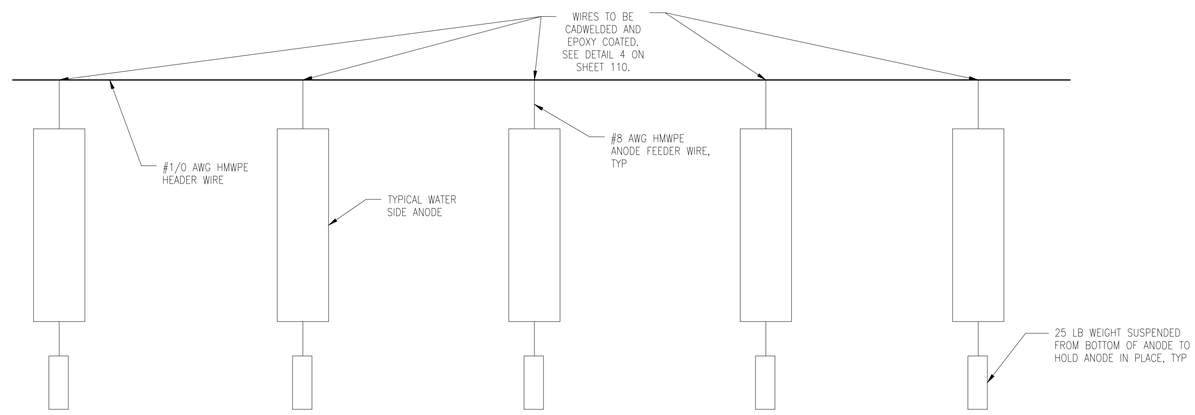

B3 TYPICAL ANODE FEEDER WIRE TO ANODE HEADER WIRE DETAIL
SCALE: N.T.S

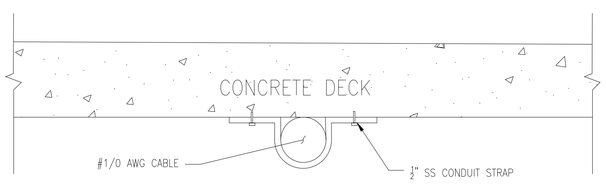

A2 1/2" CONDUIT STRAP AND ANCHOR BOLTS DETAIL
SCALE: N.T.S

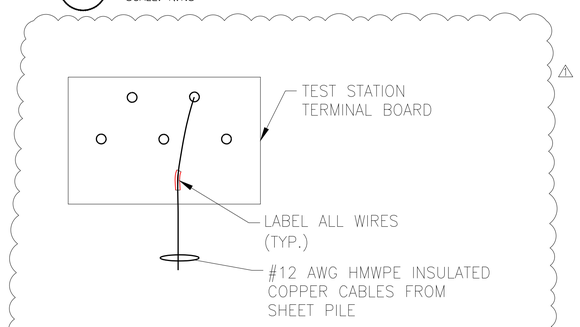

A3 TYPICALTEST STATION DETAIL
SCALE: N.T.S

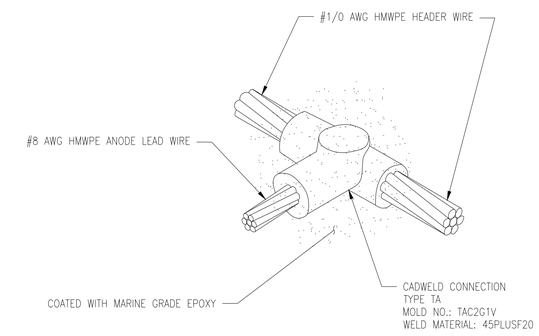

A4 UNBALANCED TYPE-T CADWELD CONNECTION
SCALE: N.T.S

Berth 6 Expansion

Port of Port Arthur
P.O. Box 1428
Port Arthur, Texas 77641

COLLINS ENGINEERS INC
501 PROCTER ST., SUITE 321
PORT ARTHUR, TX 77640
409-895-2550
WWW.COLLINSENGR.COM

VCS
VECTOR CORROSION SERVICES, INC.
8413 LAUREL FAIR CIRCLE
SUITE 200B
TAMPA, FL 33610
(813) 501-0050
WWW.VCSERVICES.COM
FL CA # 30851

STATE OF TEXAS
BRIAN M. PAILES
131712
LICENSED PROFESSIONAL ENGINEER
DATE: 6/23/2021
COLLINS ENGINEERS, INC.
TEXAS REGISTERED ENGINEERING FIRM F-9791
SEAL

REVISIONS

	DESCRIPTION	DATE
1	ADDENDUM 2	8/25/21

FOR BIDDING ONLY
NOT FOR CONSTRUCTION

Designed by:	S.Y.
Drawn by:	S.Y.
Checked by:	B.M.P
Reviewed by:	B.M.P
Revisions by:	

PROJECT NO. 8.334
DATE: 6/23/2021

PORT OF PORT ARTHUR
BERTH 6 EXPANSION
PORT ARTHUR TX

CATHODIC PROTECTION

TYPICAL CATHODIC PROTECTION DETAILS

DISCIPLINE/SHT NO
CP-003

DRAWFORM REVISION: 31 JANUARY 2017